Quick Sheet Instructions
VPR ANALOG OUTPUT BOARD
Kit 921458

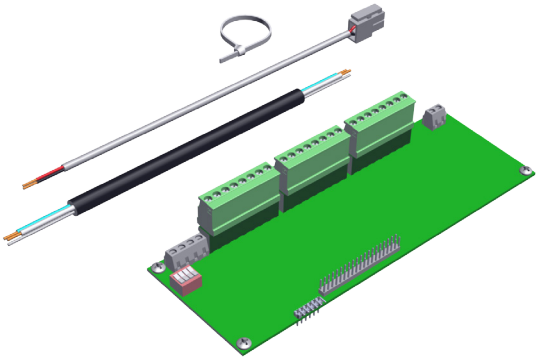

DISCONNECT ALL POWER TO THE CONTROL BEFORE SERVICING and use LOCKOUT TAG OUT PROCEDURES!

Protect yourself and others from electrical shock and against electronic static discharge. In addition to shutting down the power remember to GROUND yourself before working with this equipment.

One of the easiest ways to ground yourself is to wear an anti-static arm band connected by a wire to a pipe that is in the earth or ground. As long as that pipe has eventual contact with the earth any static that builds up can be safely diffused through the earth rather than through you. Using a static mat and/or wearing cotton rather than man-made fibres is another added precaution you can take against static.

*Always use **proper tools and wire connectors** whenever working on this electronic equipment. Splicing and taping wires is not adequate and may cause your control to operate incorrectly.*

Installing the VPR Analog Output Board

1. Mount the Board to the Bracket, 921445 using the screws that are included with the kit., as shown in Figure 1.

Figure 1

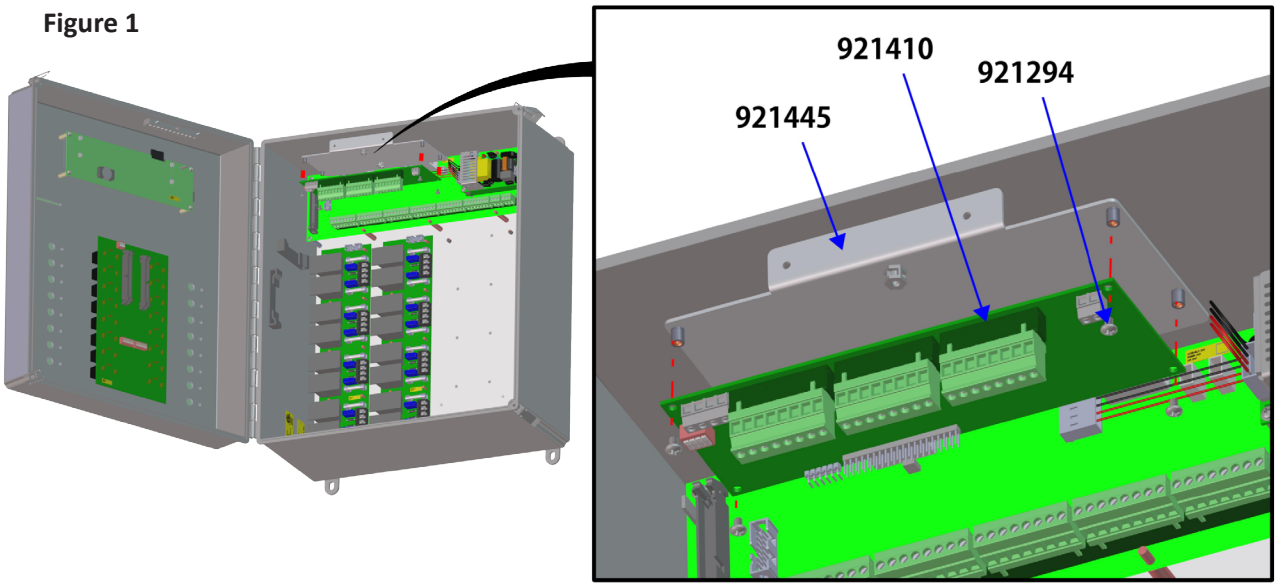

Wiring

2. Attach the 921459 as shown in Figure 2 below.

Figure 2

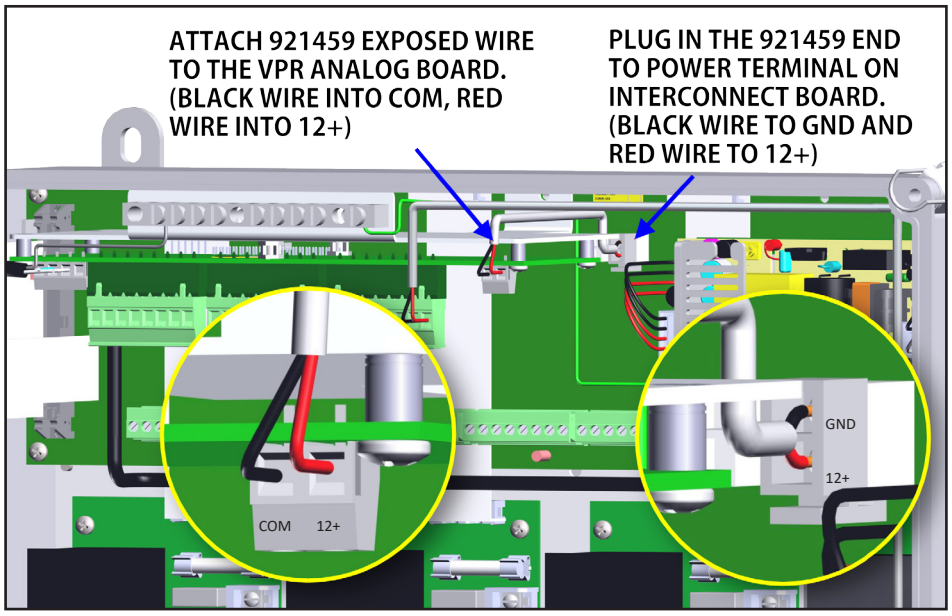

2. Cut the cable, 921513 and strip the jacket 1-1/2 " (3.81 cm) and the wires 1/4" (.64 cm) at both ends, as shown in Figure 3 below, (*the wire is condensed from actual length*). This cable will be used for Analog Outputs.

Figure 3

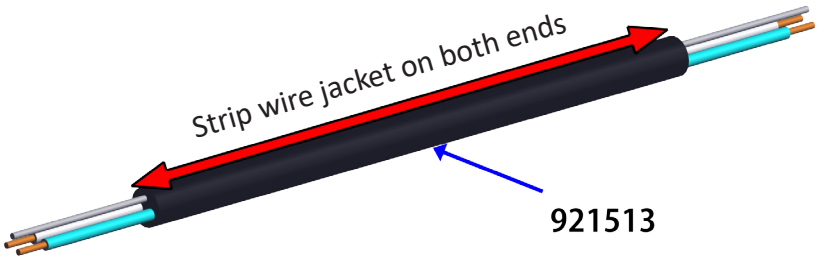

4. Attach the Communication Cable first to the VPR Analog Board, run the cable beside the bracket down to the Interconnect Board then out to the end. Run the cable along the front of the board to the terminal marked XTERN and attach as shown in Figure 4.

Figure 4

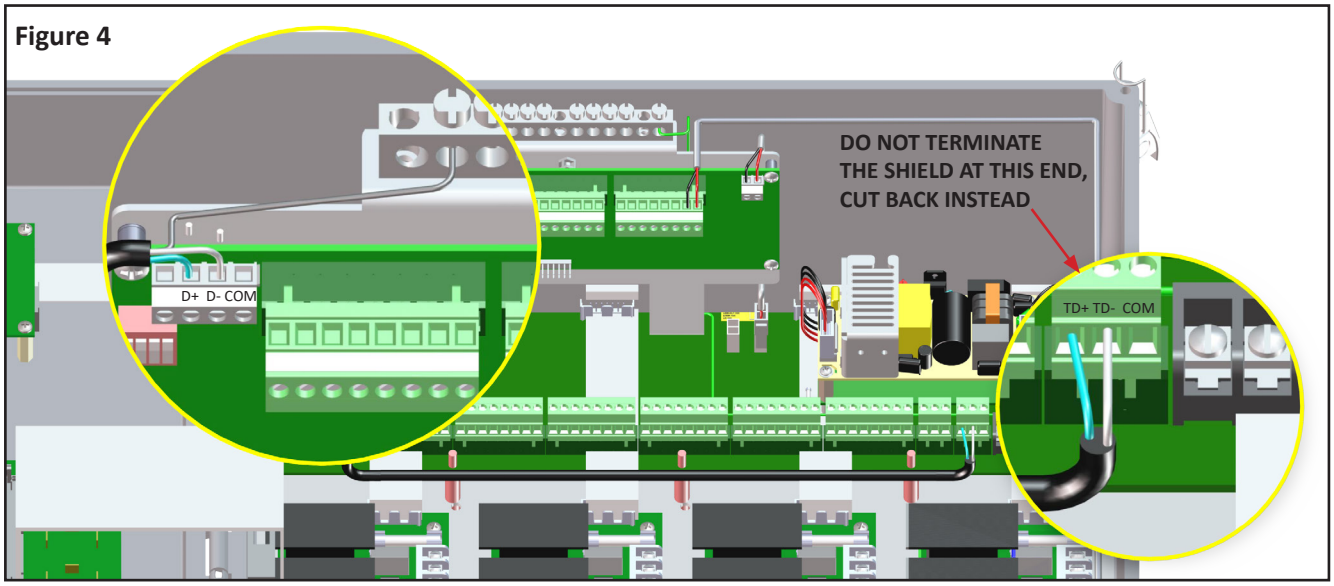

Wiring - continued

5. Attach the Vari-Heater/Brooder Gas Valve wire to the VPR ANALOG BOARD.

Figure 5

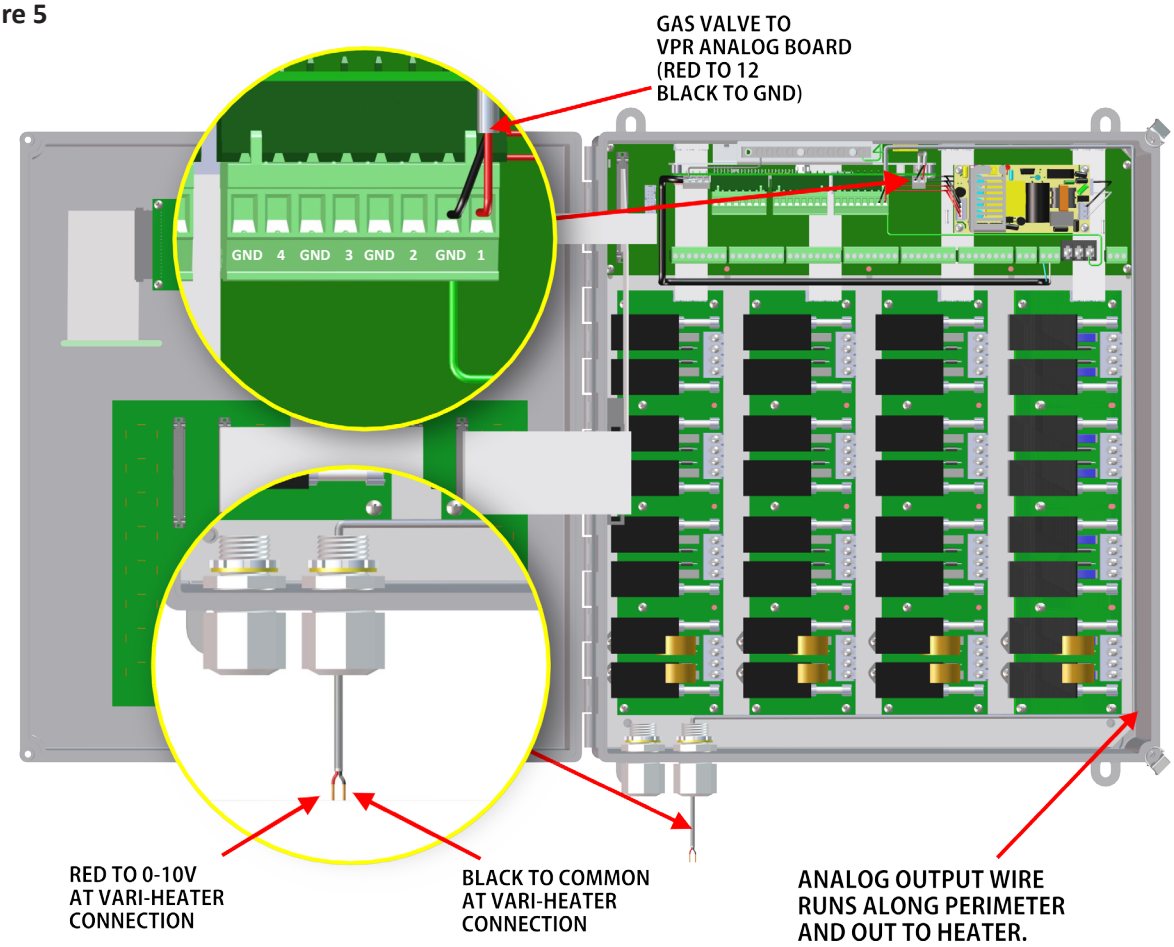

6. Use Zip ties to secure cables to the spacers.

Ensure Bracket 921445 is GROUNDED to the EARTH GROUND TERMINAL on the Interconnect Board.

Setting the DIP SWITCH VPR ANALOG BOARD

LSB = LEAST SIGNIFICANT BIT

There are four (4) DIP Switches on the VPR Analog Board that must be set to the correct position either ON or OFF to make the VPR Analog Board a slave to the Ventra Pro® control. The number entered via the switch is binary with 1 representing the LSB as shown with the switches in the OFF/ON positions. The number respresented is “11”, no other slave may have this number.

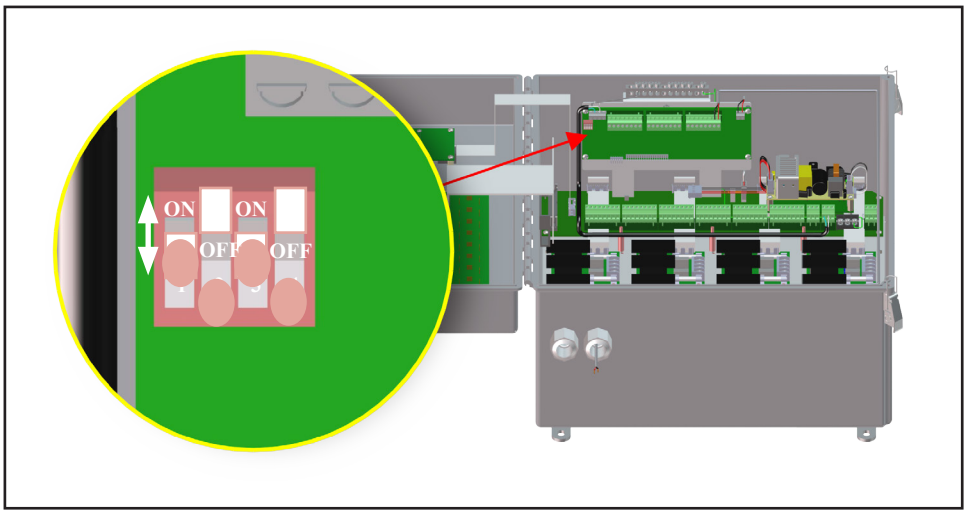

Setting DIP Switches for Expansion Stations, including the Analog Output board.

The controller assigns devices (input sensors or output channels) by station and channel number. The host controller (Interconnect Board) is always station 1.

1. Begin numbering your expansion stations from the next available number.
2. The station number is set with DIP switches on the control circuit board.

If the switch positions are changed, remove and re-apply power to the board to reset it.

Setting the Address Switches

The first four switches, SEL 1, 2, 4, and 8 are used to select an address number for the station. Each station must be given a unique number. The controller uses these address numbers to communicate with specific stations.
The table shows the switch settings for each possible address number. EXAMPLE: To assign an address number of 2, the switches would be set as follows: SEL 1 - on, SEL 2 -off, SEL 4 -off, SEL 8 - off
Please Note: Under normal circumstances when your controller is not connected to an expansion station the dip switch is typically set to address number 2.

Actual DIP Switch block orientation and labeling may vary from the example shown.

Station #	1 host	2	3	4	5	6	7	8	9	10	11	12	13	14	15	16
SEL 1	OFF	ON	OFF	ON	OFF	ON	OFF	ON	OFF	ON	OFF	ON	OFF	ON	OFF	ON
SEL 2	OFF	OFF	ON	ON	OFF	OFF	ON	ON	OFF	OFF	ON	ON	OFF	OFF	ON	ON
SEL 4	OFF	OFF	OFF	OFF	ON	ON	ON	ON	OFF	OFF	OFF	OFF	ON	ON	ON	ON
SEL 8	OFF	OFF	OFF	OFF	OFF	OFF	OFF	OFF	ON	ON	ON	ON	ON	ON	ON	ON

Wiring Diagram

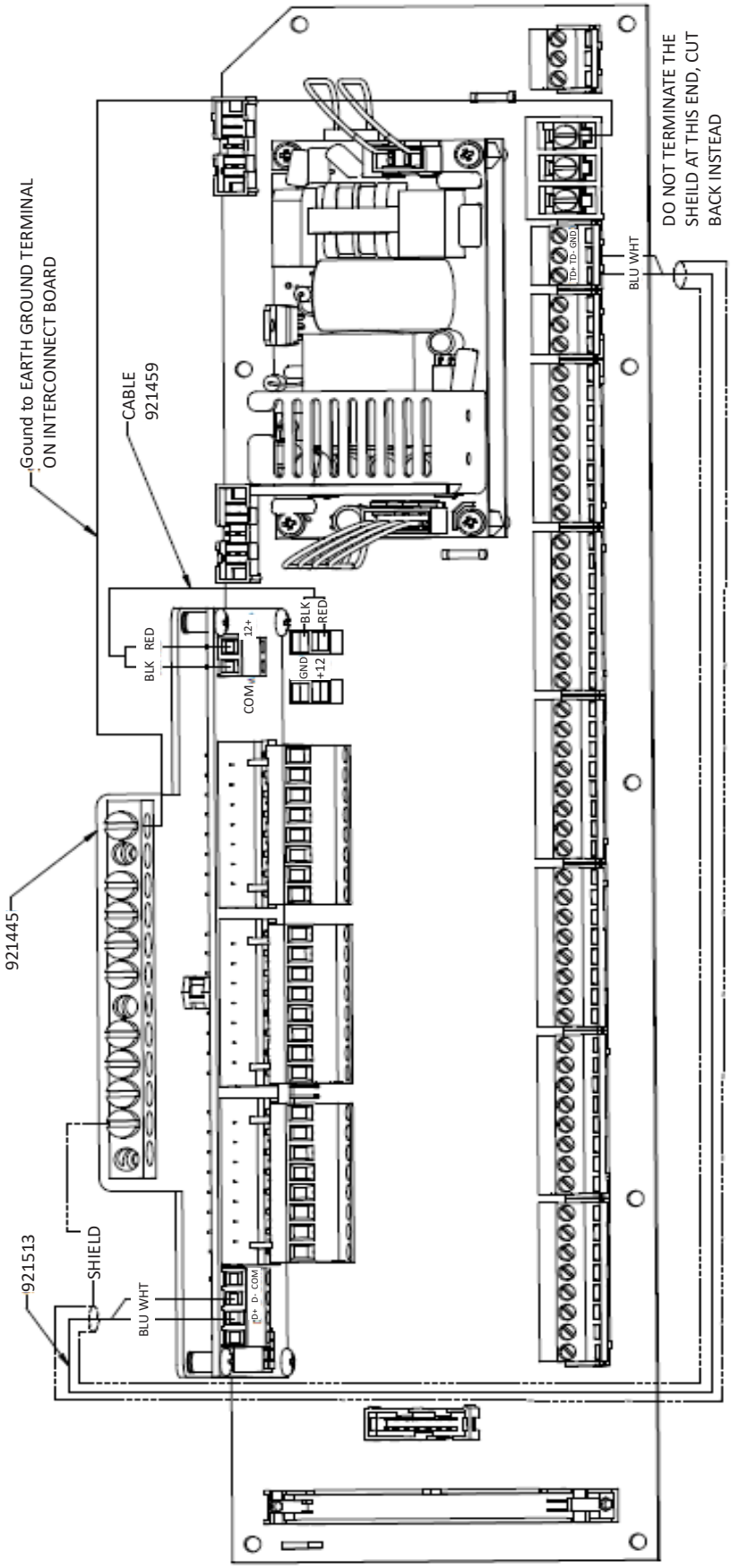

Updating the controller with New Version of Software

Updating the Old HMI Board (green screen)

Controller/SD Card Instruction

Updates to the controller software are done using either a VALCO® provided SD card, or a VALCO® provided "update.bin" file. The update will only be performed if the version displayed on the controller doesn't match the version of the update.

To perform the update, follow one of the procedures below, depending on the type of update received.

Read warnings below before you begin.

If the Update came on an SD card:

1. Disconnect power to the controller.
2. Remove the current SD card from the controller.
3. Insert the new SD card containing the update.
4. Restart the controller.
5. As soon as the update is finished, disconnect power to the controller.
6. Remove the update card.
7. Reinsert the original SD card.
8. Power up the controller and resume operations.

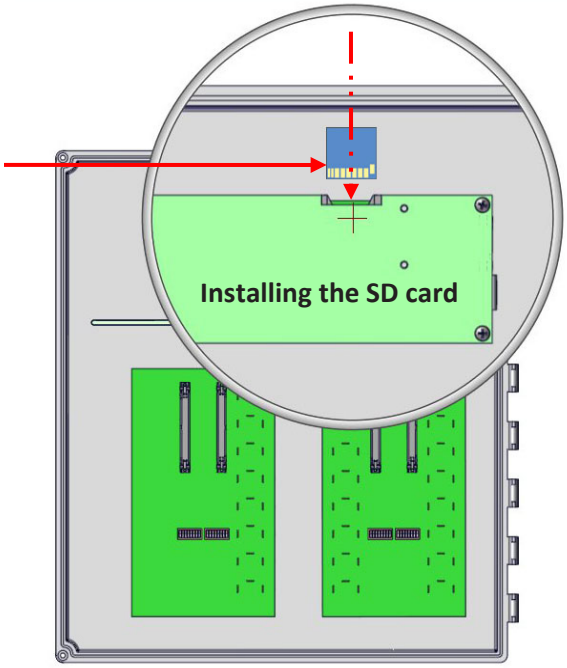

If you fail to reinsert the original SD card, the controller will no longer contain your previous history and alarm records.

If the update was provided as a file only (for example, you received the update by email):

1. Disconnect power to the controller.
2. Remove the current SD card from the controller.
3. Using a computer, with an SD card reader, and using a Windows operating system, copy the "update.bin" file to the root directory of the SD card.
4. Reinsert the SD card containing the update file into the controller.
5. Restart the controller.
6. As soon as the update is finished, the controller will resume normal operations.

Removing the SD card without disconnecting the power may cause an "SD Card Error" alarm, if the controller has to access the card while it is removed. Keep the time the controller does not have the SD card installed to a minimum to avoid these alarms.

Warning!

1. DO NOT shut off the controller while the update is proceeding. Doing so will corrupt the software on the controller and will not work correctly, if at all. If the software becomes corrupted, the controlle will have to be updated with a previous version of the software, before it will start working correctly and update process can be resumed.
2. When working with the SD card, do not delete or rename any of the files on the SD card. These files contain all the information needed to set up and run the controller and also contain all the Alarm and History information of the controller. If these files are deleted or changed in any way, you may have to set up the controller again from the beginning.
3. When updating the controller, manually set the toggle switches for the Output relays as needed to control the environment of the barn. Updating the controller takes approximately 10 minutes. During the update process, the controller is not monitoring or controlling the devices in the barn. Once the update is done, the controller will resume operations and you can set the toggle switches back into their normal operating positions.
4. The Alarm relay is activated during the update and will set off any alarm system attached to the controller.

Updating the Controller in Process - Display Screen Views

Updating of the controller when the versions don't match:

When the controller powers up with an update SD card installed, it will compare the version number of the update to the version currently installed. The Update process only takes place if these versions are different. If the versions do not match, the following screens will be displayed:

Ventra HMI Bootloader v1.00.003
Revisions are not identical

Ventra HMI Bootloader v1.00.003
Validating update file (command 1298)

Ventra HMI Bootloader v1.00.003
Processing update (987 of 1307) These numbers are examples

Ventra HMI Bootloader v1.00.003
Update competed successfully

The display screen for non-matching versions will display for as long as the controller is processing the information.

Updating of the controller when the versions DO MATCH:

If the software versions match, the following screen will display only briefly:

Ventra HMI Bootloader v1.00.003
Revisions are identical

Since the versions are identical, no update takes place so the controller resumes normal operation.

Updating the new HMI (white screen).

With the new HMI board (white screen), the software update is not done automatically like it was with the old HMI board (green screen). You will be asked to select which file to update from. The file name will end in “hex”, such as “M1_00_00_52.hex”.

The update procedure is outlined below, along with screen images. Please note that in any of the spots during the update procedure that waits for some type of user intervention, if no hotkeys are pressed within 30 seconds, the update process will be aborted and the system will start up with the currently loaded software and begin normal operations.

Here are the steps required to update the VPII.

1. Copy the hex file onto a blank SD Card.
   a) It is recommended that a blank SD card be used with the update, and the original SD card be replaced at the end of the update.
   b) However, you can use the original SD card to hold the hex file. If this is done, the hex file should be removed from the SD card once the update is complete. Otherwise, there is up to a minute delay on each and every startup, while the bootloader waits to see if the Enter key is going to be pressed.
2. Power down the controller.
3. Remove the current SD card from the controller and insert the SD card with the Hex file on it.
4. Restart the controller.

```
Ventra II  HMI Bootloader                                   v 01.01.09
Compiled Mar 27 2018 @ 12:56:34
```

5. The system will pause at the following screen for 30 seconds.
6. Press the ENTER key to proceed to the software update procedure.

```
To load file from SD card, Press ENTER.
To skip program load, Press CANCEL.
```

7. Use the Plus and Minus keys to start scrolling through the possible update hex files on the SD Card.
   a) The file for each software version will have a different name which will include the version number. Multiple update Hex files can be on the same SD card, and the user will need to select which file to use.

```
Press CHANGE +, CHANGE - to scroll list,
ENTER to select program, CANCEL to exit.
```

8. The screen below shows what the screen will display as you press the Plus or Minus key.
   a) The top line shows the hex file name (M1_00_00_52.hex), the version number (1.00.00.52), and the date the hex file was created (05/23/18).
   b) The bottom line shows the application description.
   c) Note: the numbers on the right hand side of the second line are for debugging purposes.

```
M1_00_00_52.HEX                                  1.00.00.52   05/23/18
Ventra PRO APP M1.00.00.52                                   0X9D036000
```

   d) The last screen viewed, when pressing the Plus Key displays the version information for the currently loaded application software. Use this screen to see what is currently running on the system before doing the software update.

```
Current loaded app:                                          1.00.00.52
Ventra PRO M1.00.00.52      05/23/18
```

Updating the new HMI (white screen) - continued

9. Once the screen is showing the hex file to be used for updating, press the ENTER key to start the update process. The processing of the update will take 15 to 20 seconds. The process will:
   a) Validate the hex file before updating the system.
   b) Process the update.
   c) Verify the memory image once the update has been processed.

```
Ventra II HMI Bootloader                                    v 01.01.09
Validating update file      (command      6,145)
```

```
Ventra II HMI Bootloader                                    v 01.01.09
File verified:   M1_00_00_52. HEX
```

```
Ventra II HMI Bootloader                                    v 01.01.09
Processing Update           (command      3,073)
```

```
Ventra II HMI Bootloader                                    v 01.01.09
Verifying memory image   (command      4,097)
```

```
Ventra II HMI Bootloader                                    v 01.01.09
Update completed successfully.
```

10. Once the processing of the update is done, you will be asked to remove the SD card that contains the Hex file.
    a) This is recommended, but not required.
    b) Leaving in a SD card with a hex file on it will cause the startup of the controller to be delayed by up to 1 minute.

```
Please remove software update SD card.
```

11. After removing the Update SD card, put the original SD card back into the controller's SD card slot.
    a) Once inserted, the bootloader will show the free space on the SD card and continue with the normal startup routine.

```
SD card free space = 7,587  MB.
```

Setting up Vari-Heater/Brooder Output Devices

Vari-Heaters and Vari-Brooders work differently than standard, fixed output heaters. For variable heating devices, a Target temperature is set, which the heater tries to maintain by varying the gas/heat output. The purpose of this is to try and maintain the temperature in the building as close to the Target temperature as possible and eliminate the wild swings seen with fixed output heaters. The longer the temperature stays below the Target temperature, the higher the heat output will be. As the temperature approaches the Target temperature the heat output will decrease. Over time the heater will find a heat output that allows the temperature to hover within a degree or two of the Target temperature. *Instructions are on the following pages.*

The power to the Vari-heater or Vari-Brooder is set up like any other device (wired to a regular output channel) and is configured to one of the relays on the main Ventra Pro board or expansion station. The GAS GAUGE is wired to the analog board. The relay will turn on and off the heater.

Now you will need to setup the Module of the analog board and the channel where the wires to the Gas value are connected in the control.

More detail available in the Ventra Pro Manual which can be found at http://www.val-co.com/resources/manuals.aspx

System & Control Device Set-up Menu

Scroll through the list of devices by pressing the PLUS or MINUS key. Press ENTER when viewing the ADD menu to add a device.


```
SYSTEM & CONTROL DEVICE SET-UP                    Z1-S02
Press ENTER to ADD a Control Device.
```

You are prompted with a control device name to add. Use the PLUS or MINUS keys to scroll through the list of possible devices. Use the LEFT or RIGHT arrow keys to move between fields. Use the PLUS or MINUS keys to change values in fields.

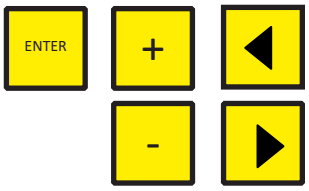


```
ADD: Vari-heater                                  # 11  Z1-S02
to Module 01     Channel 11
```

Group/Device Number

Specify device number and which zone to install the device to. Use same process to scroll as explained previously.

Press the ENTER key ***twice (2 times)*** to accept the new values.

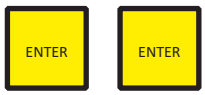


```
ADD: Vari-Heater                                  #2   Z1-S02
ARE YOU SURE?  <ENTER> to confirm.
```

The Vari-Heater and Vari-Brooder Settings are listed under the DEVICE / EQUIPMENT SETTINGS menu. You will need to set up the devices listed for each Vari-Heater or Vari-Brooder in the menu.

CONTROL SETTINGS

```
DEVICE / EQUIPMENT SETTINGS                    Z1-S01
PRESS ENTER TO VIEW SETTINGS
```

Gas Regulator

Enter the Module and Channel number of the Analog Output board where the Gas Regulator of the heater is attached. **NOTE:** When first installed, this is the first menu and has to be set before the other menus will appear. Once you have entered, this menu is the last menu in the heater list.

ENTER

```
VARI-BROODER GROUP  #1 SETTING                 Z1-S01
 Gas Regulator: Module:  2  Channel:    1
```

Use Sensors

Input the group numbers of the air sensors you want to use for controlling the vari-brooders and vari-heaters. The controller uses Shared Sensor Technology to average the temperature readings of any sensors you want to use to control any device.

ENTER

```
VARI-BROODER GROUP #2 SETTING                  Z1-S01
Use Sensors: ALL                     (Avg  74.7)
```

Lower Temp By

This menu allows you to have the temperature of the barn lowered at night when the animals are less active and do not require as much heat. Set the "Lower Temp By" to the number of degrees to lower the on and off temperature settings of the heater during the time of day specified. Set this value to 0.0 to disable the feature. Set the "From" time to the time of day when the On/Off Temperature should be lowered. Set the "To" time to the time of day when the On/Off Temperature should be returned to the normal, higher on/off temperatures. Note: there is no ramping of the temperature settings when switching between the lowered On/Off temperatures and normal On/Off temperatures.

```
VARI-BROODER GROUP #2 SETTING                  Z1-S01
Lower Temp by:   2.2  from 23:00 to 6:00
```

This menu is read only and will only appear if the menu, "Lower Temp By x from x:xx to x:xx", is set. The menu shows what the on and off temperature of the heater will be during the time period when the temperature is lowered in the barn. (See menu options on the previous page for more details).

```
VARI-BROODER GROUP #1 SETTING                  Z1-S01
Target Temp:   68.1     OFF:  70.2  ACTUAL
```

Interlock Curtain Groups

If you have set the Heater to Curtains Interlock (refer to the Temperature Control Settings section) specify the curtain (and ridge vent) groups here. When interlocking is enabled for heaters (and brooders and furnaces), and the controller detects that the heater's ON Temp has been reached, the heater will not turn on if the interlocked curtains are open more than about one inch.

```
VARI-BROODER GROUP #2 SETTING                  Z1-S01
Interlock Curtain Grps: 1, 2, 3, 0, 0, 0
```

Input up to six curtain groups. Enter all zeros to interlock the heater with all groups.

Use During Heat Purge

Set Use During Heat Purge to YES to have this heater used to heat the building before a purge. (See Purge Settings for more information)

VARI-BROODER GROUP #2 SETTING	**Z1-S01**
Use During Heat Purge: Yes	

When used for Heat Purging, the variable heat device's output will be set to maximum, regardless of the current temperature.

BTUs Minimum / Maximum

Set the Minimum and Maximum BTUs (in thousand) as stated on the variable heater. These values are used to determine the current running BTUs displayed in the Current Equipment Status, to calculate the average running BTUs for the hourly history records, and in calculating a rough estimate of the number of gallons used by the heating device, which is displayed under the Summary menu.

VARI-BROODER GROUP #1 SETTING	**Z1-S01**
BTUs Minimum 65000 Maximum 250000	

The Gallons used per heating device and the total gallons used are displayed under the Summary menus. The gallons used calculations are very rough estimates and should not be used to determine the amount of gas left in the tanks.

Target Temperature

This is the desired temperature of the barn. The variable heating device will adjust the output of the device to reach and maintain this temperature. Once this temperature is reached, the heater will continue to run, making small adjustments to the heater output to maintain the temperature.

VARI-BROODER GROUP #1 SETTING	**Z1-S01**
Target Temp: 68.1 OFF: 70.2 ACTUAL	

The "Actual" wording will only appear when the "Lower Temp by" setting is greater than 0.

Alarm When Heater is at MAX for

This setting allows an alarm to activate if the heater runs at maximum output for the set amount of time. Unless the zone is very cold, such as during the start of a new group, the variable heating devices should run at less than full output most of the time. If the device is running at maximum output for a long time, it usually indicates a problem with the heater.

VARI-BROODER GROUP #1 SETTING **Z1-S01**
Alarm When Heater is MAX for: 0:30:00

Shut OFF Heater on Alarm

This setting only appears when the "Alarm When Heater is at MAX for" settings is greater than 0. It provides the ability to turn the heater off if the heater is running at maximum output for too long. Running at maximum output for too long usually indicates a problem with the heater.

VARI-BROODER GROUP #1 SETTING **Z1-S01**
Shut OFF Heater on Alarm: Yes

Control Equipment Status

Vari-Brooders and Vari-Heaters

For the Vari-Brooders and Vari-Heaters, the average BTU output for the hour of the heater is shown before the runtimes. This average BTU value is calculated only while the heater was running.

The current ON/OFF status of the individual heater is shown. If the heater is on, the current BTU output of the heater is shown.

Control Equipment Status Z1-S02
VariBrooder #1: On at 121K BTU

History Menus - *Scroll to History By Date*

Runtimes and Average BTU Output

For the Vari-Brooders and Vari-Heaters, the average BTU output for the hour of the heater is shown before the runtimes. This average BTU value is calculated only while the heater was running.

History For 06/12/2015 At 10:00 Z1-S02
VariBrooder #1 105K C- 7:50 A- 7:50

Part Drawings

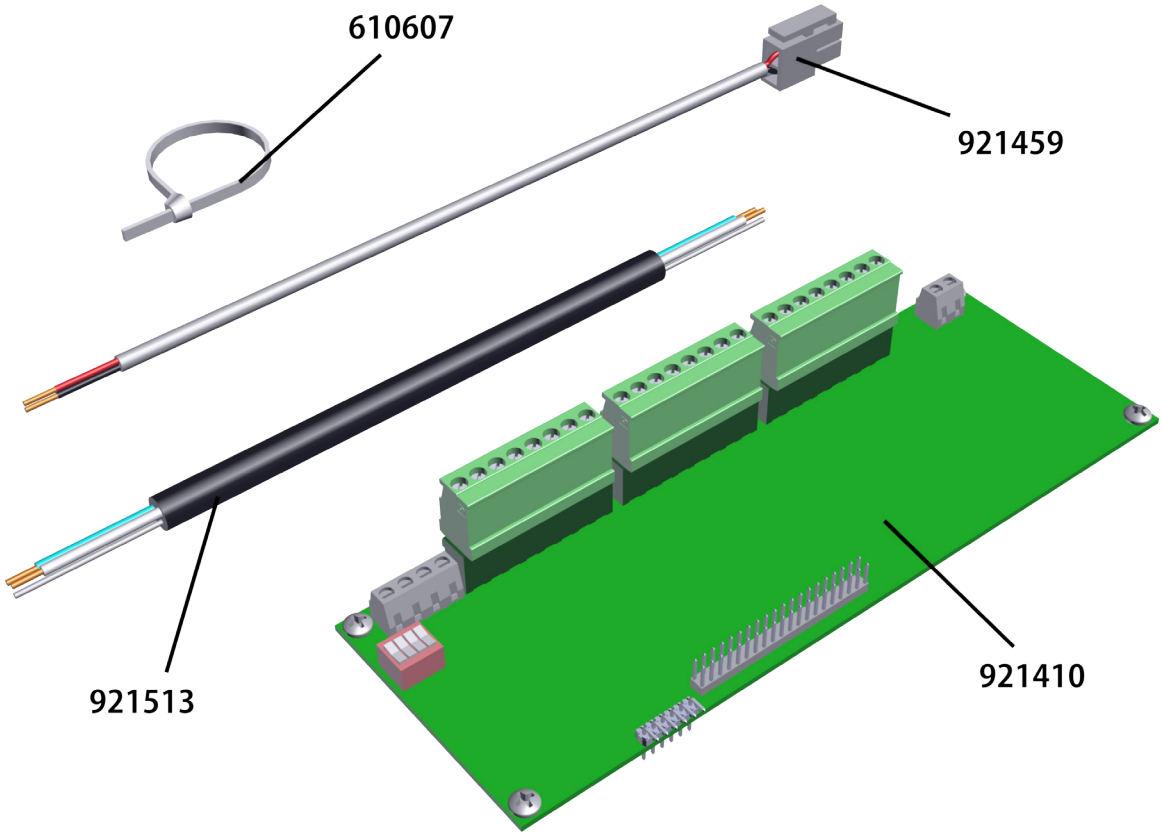

Parts List

Part #	Description	Qty
921458		
610607	TIE WRAP	1
921410	VPR ANALOG OUTPUT BOARD	1
921294	SCREW, PHMS 6-32 X 3/16ZP	4
921459	POWER/WIRE	1
921513	CABLE SHIELDED	1