NO.	PART # (24" / 36")	REQ'D	PART NAME
1	ZR702 / ZR712	1	WINTER DOOR
2	MH90926	1	EYE BOLT, 1/4-20 X 1 1/2" SS
3	MH90923	1	WELD NUT, 1/4-20, SS SLAB BASE
4	MH90922	3	LAG,OPEN EYE,3/16X3 3/4 SS
5	--------	-	WINTER DOOR LANYARD (ON WINTER DOOR ASS'Y)
6	MH90919	3	SCREW, PAN HD., #12 X 1 1/4, SQ DR., SS
7	ZR1746	2	THUMB NUT, 1/8" CABLE

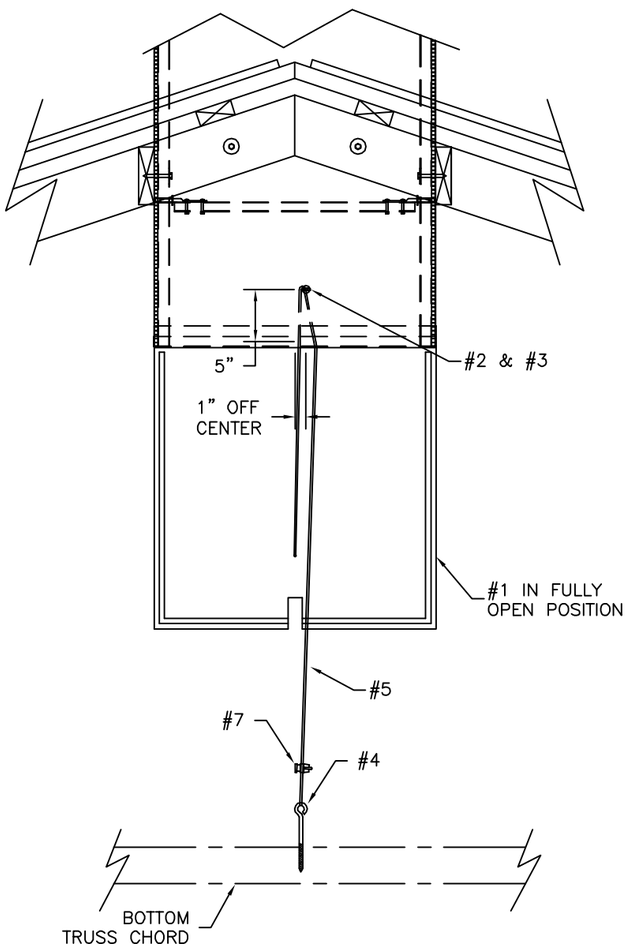

FRONT VIEW

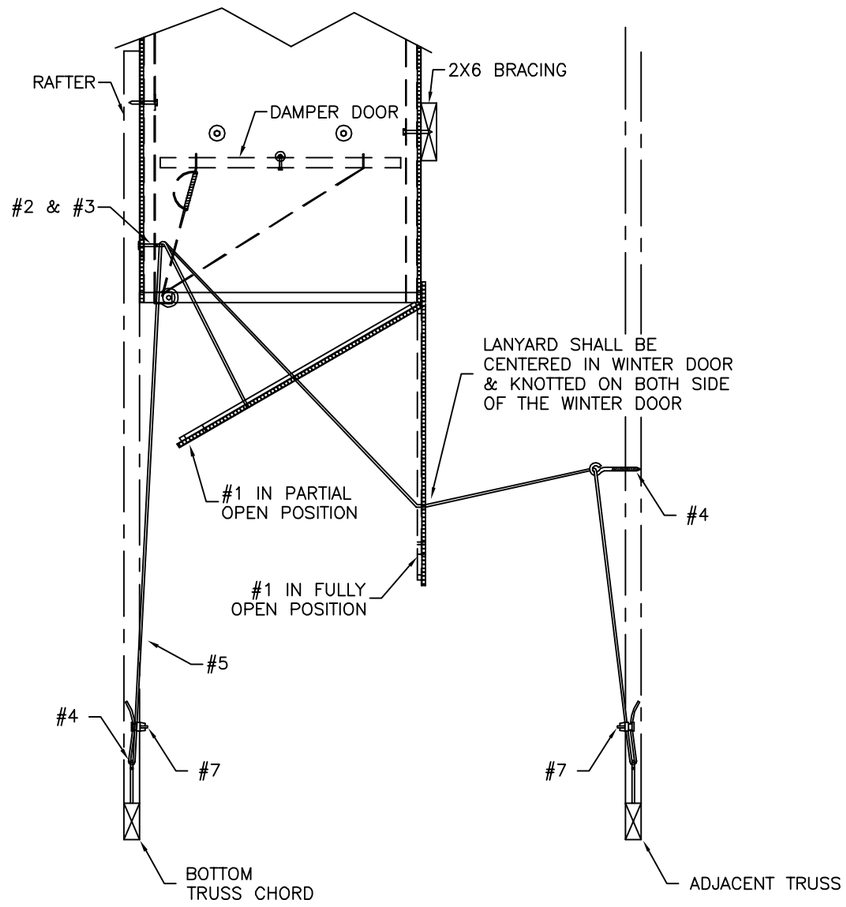

SIDE VIEW

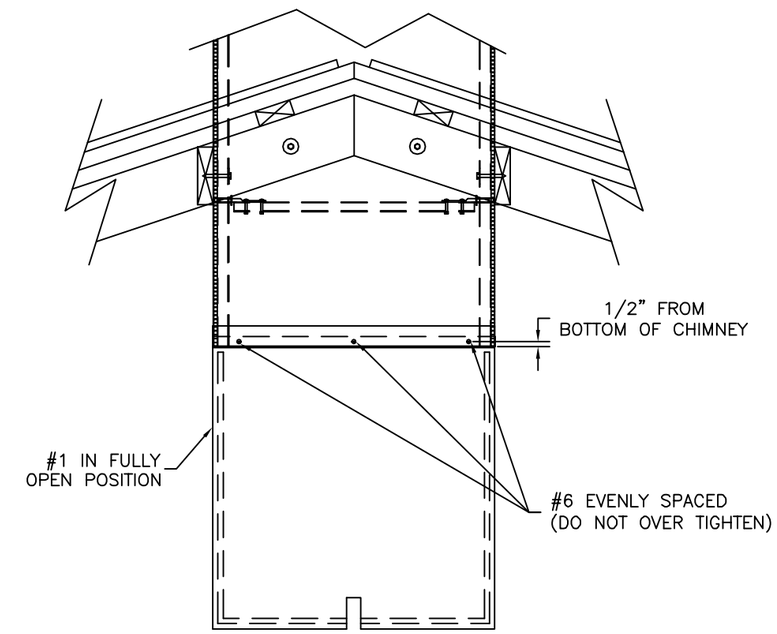

BACK VIEW

ECO #	REV.:	BY:	DATE:	DESCRIPTION OF CHANGE
RA1268	D	JFW	081007	SWITCH TO SS PARTS
	C	JMH	060506	ADD DIMENSION & OVERTIGHTEN NOTE TO THE BACK VIEW
	B	JMH	021706	VERIFY & UPDATE PARTS LIST AND DRAWING
	A	JMH	100698	DOUBLE THE LENGTH OF THE WINTER DOOR LANYARD & ADD 2 EYE BOLTS

TOLERANCES UNLESS OTHERWISE SPECIFIED
FRACTIONS ± 1/32
DECIMALS
INCH .X ± .030
.XX ± .020
.XXX ± .010
ANGLES ± 0.5°
MATERIAL:

DATE: 050898
DRAWN BY: JMH
ENGR:
APPROVED:
DLR: NONE
REP:

WINTER DOOR FOR RAYDOT INSULATED CHIMNEY

INSTALLATION INSTRUCTIONS

SCALE: NONE
SHEET 1 OF 1

RAYDOT LLC
Success Is In The Air
145 JACKSON AVE. SO., COKATO, MN. 55321

DRAWING NUMBER
IS10041