FOR YOUR SAFETY

If you smell gas:

1. **Open windows.**
2. **DO NOT try to light any appliance.**
3. **DO NOT use electrical switches.**
4. **DO NOT use any telephone in your building.**
5. **Extinguish any open flame.**
6. **Leave the building.**
7. **Immediately call your local gas supplier after leaving the building. Follow the gas supplier's instructions.**
8. **If you cannot reach your gas supplier, call the Fire Department.**

⚠ WARNING

Fire Hazard

Keep all flammable objects, liquids and vapors the minimum required clearances to combustibles away from heater.

Some objects will catch fire or explode when placed close to heater.

Failure to follow these instructions can result in death, injury or property damage.

HEATRITE™ MODULATING

Gas-Fired, Low Intensity Unitary Heater

Installation, Operation & Service Manual

VM-80
VM-115
VM-150
VM-200

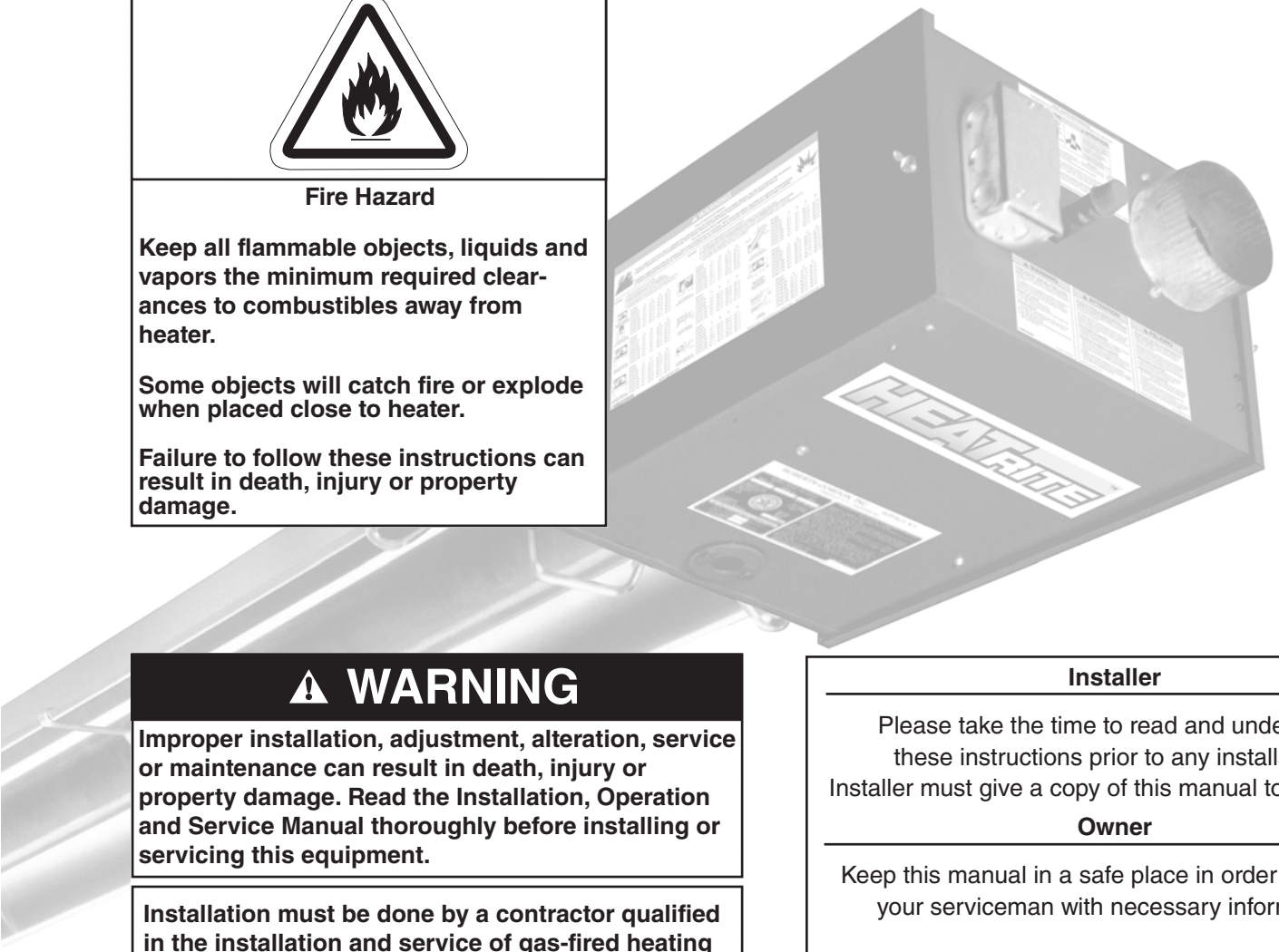

⚠ WARNING

Improper installation, adjustment, alteration, service or maintenance can result in death, injury or property damage. Read the Installation, Operation and Service Manual thoroughly before installing or servicing this equipment.

Installation must be done by a contractor qualified in the installation and service of gas-fired heating equipment or your gas supplier.

Installer

Please take the time to read and understand these instructions prior to any installation. Installer must give a copy of this manual to the owner.

Owner

Keep this manual in a safe place in order to provide your serviceman with necessary information.

DESIGN CERTIFIED ®

CSA CERTIFIED ®

VAL-CO.
210 E. Main Street
P.O. Box 117
Coldwater, OH 45828 USA
Telephone: 800-998-2526
Fax: +1.419-678-2200

www.valcompanies.com

© 2012 Roberts-Gordon LLC

P/N VM34100NA Rev H 02/12

TABLE OF CONTENTS

SECTION 1: Heater Safety 1
1.1 Manpower Requirements 1
1.2 Safety Labels and Their Placement 1
1.3 California Proposition 65 1
SECTION 2: Installer Responsibility 4
2.1 Wall Tag 4
2.2 Brooder Wall Tag 4
2.3 Corrosive Chemicals 4
2.4 National Standards and Applicable Codes 5
SECTION 3: Clearances to Combustibles 6
3.1 Required Clearances to Combustibles 6
SECTION 4: National Standards and Applicable Codes 9
4.1 Gas Codes 9
4.2 Aircraft Hangars 9
4.3 Public Garages 9
4.4 Electrical 9
4.5 Venting 9
4.6 High Altitude 9
SECTION 5: Major Components 10
5.1 Standard Parts List 11
SECTION 6: Heater Installation 12
6.1 Burner Tube Installation 16
6.2 Tube Clamp Package Installation 16
6.3 Coupling and Tube Assembly 17
6.4 Turbulator Installation 18
6.5 Reflector Installation 19
6.6 Burner Installation 21
SECTION 7: Optional Heater Accessories 22
7.1 U-Tube Configuration 22
7.2 Elbow Package Configuration 25
7.3 Reflector Side Extension 27
7.4 Lower Clearance Shield Installation 28
7.5 Two-Foot Decorative Grille Installation 28
7.6 Protective Grille Installation 30
SECTION 8: Venting 31
8.1 Venting 31
8.2 Unvented Operation 31
8.3 Horizontal Venting 32
8.4 Vertical Venting 32
8.5 Unvented Operation Tube Termination 32
8.6 Length Requirements 32
8.7 Horizontal Ventilation 4" (10 cm) Pipe 32
8.8 Vertical Ventilation 4" (10 cm) Pipe 33
8.9 Common Side Wall Venting 33
8.10 Common Vertical Venting 34
8.11 Outside Combustion Air Supply 35
SECTION 9: Gas Piping 37
SECTION 10: Wiring 39
10.1 Heater Wiring for use with Brooder Contoller 39
10.2 Standard Heater Configuration 41
10.3 Central and Satellite Heaters (Zoning Capability) 42
10.4 Communication Wiring within a Zone of Heaters 44
10.4 Communication Wiring within a Zone of Heaters (continued) 45
10.5 Heat Demand Control Wiring 46
10.6 Internal Wiring 54
10.7 Ladder Diagram 55
10.8 Electrical Connection to the Burner 55
10.9 Low Voltage Control Wiring Installation 56
SECTION 11: Operation and Maintenance 57
11.1 Sequence of Operation 57
11.2 To Shut Off Heater 57
11.3 To Start Heater 57
11.4 Pre-Season Maintenance and Annual Inspection 57
SECTION 12: Troubleshooting 60
12.1 Control LED 61
12.2 General LED Codes 61
12.3 Troubleshooting Flow Chart 63
12.4 Manifold Gas Pressure Measurement 65
12.5 Pneumatic Connections 66
SECTION 13: Replacement Parts 67
SECTION 14: General Specifications 70
14.1 Material Specifications 70
14.2 Heater Specifications 70
14.3 Suspension Specifications 70
14.4 Controls Specifications 70

There are references in this manual to various trademarks. All trademarks mentioned herein, whether registered or not, are the property of their respective owners. Roberts-Gordon LLC is not sponsored by or affiliated with any of the trademark or registered trademark owners, and make no representations about them, their owners, their products or services. Roberts-Gordon LLC is not sponsored by or affiliated with BACnet® or LonWorks®.

© 2012 Roberts-Gordon LLC

All rights reserved. No part of this work covered by the copyrights herein may be reproduced or copied in any form or by any means - graphic, electronic, or mechanical, including photocopying, recording, taping or information storage and retrieval systems - without the written permission of Roberts-Gordon LLC.

Printed in U.S.A.

TABLE OF FIGURES

Figure 1: Top and Bottom Panel Label Placement 2
Figure 2: Side and Back Panel Label Placement 3
Figure 3: Standard Reflector 6
Figure 4: One Side Reflector 7
Figure 5: Two Side Reflectors 7
Figure 6: U-Tube, Standard Reflector 7
Figure 7: 2-Foot Deco Grille and Protective Grille 8
Figure 8: Lower Clearance Shield* 8
Figure 9: Venting 8
Figure 10: Major Component Descriptions 10
Figure 11: Critical Hanger Placement 13
Figure 12: Linear Heater Assembly Overview 14
Figure 13: Linear Heater Layout Overview 15
Figure 14: U-Tube Heater Assembly Overview 23
Figure 15: U-Tube Heater Layout Overview 24
Figure 16: Reflector Joint Detail 26
Figure 17: Tube Termination 32
Figure 18: Gas Connection with Flexible Gas Hose 38
Figure 19: Line Voltage Power Wiring 39
Figure 20: Low Voltage Brooder Control Wiring 40
Figure 21: Zone Sensor Wiring Diagram 41
Figure 22: Central Heater Jumper Settings 42
Figure 23: Satellite Heater Jumper Setting 43
Figure 24: Communication Wiring within a Zone of Heaters ... 44
Figure 24: Communication Wiring within a Zone of Heaters (continued) 45
Figure 25: Thermostat Control Wiring Diagram 46
Figure 26: Analog Control Signal Wiring Diagram 49
Figure 27: Potentiometer Control Wiring Diagram 50
Figure 28: Modulating Thermostat Wiring Diagram (LonWorks® [4-20 mA] optional) 51
Figure 29: Modulating Thermostat Wiring Diagram (LonWorks® [2-10Vdc with 500 Ohm resistor] optional) 52
Figure 30: Modulating Thermostat Wiring Diagram with BACnet® (optional) 53

LIST OF TABLES

Table 1: Contents of Burner Carton 11
Table 2: Contents of Wide Pattern Core and Wide Pattern Extension Packages 11
Table 3: VM-Series Component Package Guide 11
Table 4: Cable Requirements 48

SECTION 1: HEATER SAFETY

Your Safety is Important to Us! This symbol is used throughout the manual to notify you of possible fire, electrical or burn hazards. Please pay special attention when reading and following the warnings in these sections.

Installation, Service and Annual Inspection of heater must be done by a contractor qualified in the installation and service of gas-fired heating equipment.

Read this manual carefully before installation, operation or service of this equipment.

This heater is designed for heating nonresidential indoor spaces. Do not install in residential spaces. These instructions, the layout drawing, local codes and ordinances, and applicable standards that apply to gas piping, electrical wiring, venting, etc. must be thoroughly understood before proceeding with the installation.

Protective gear is to be worn during installation, operation and service. Thin sheet metal parts, including the aluminum reflector portion of the heater and the various venting components, have sharp edges. To prevent injury, the use of work gloves is recommended. The use of gloves will also prevent the transfer of body oils from the hands to the surface of the reflector.

Before installation, check that the local distribution conditions, nature of gas and pressure, and adjustment of the appliance are compatible.

This heater must be applied and operated under the general concepts of reasonable use and installed using best building practices.

This appliance is not intended for use by persons (including children) with reduced physical, sensory or mental capabilities, or lack of experience and knowledge, unless they have been given supervision or instruction concerning use of the appliance by a person responsible for their safety. Children should be supervised to ensure that they do no play with the appliance.

For additional copies of the Installation, Operation and Service Manual, please contact Val-Co.

1.1 Manpower Requirements

To prevent personal injury and damage to the heater, two persons will be required for installation.

1.2 Safety Labels and Their Placement

Product safety signs or labels should be replaced by the product user when they are no longer legible.

Please contact Val-Co or your VAL-CO independent distributor to obtain replacement signs or labels. *See Page 2, Figure 1 through Page 3, Figure 2*.

1.3 California Proposition 65

In accordance with California Proposition 65 requirements, a warning label must be placed in a highly visible location on the outside of the equipment (i.e., near equipment's serial plate). See label placement drawing *on Page 2, Figure 1* for label location. Avoid placing label on areas with extreme heat, cold, corrosive chemicals or other elements. To order additional labels, please contact Val-Co or your VAL-CO independent distributor.

FIGURE 1: Top and Bottom Panel Label Placement

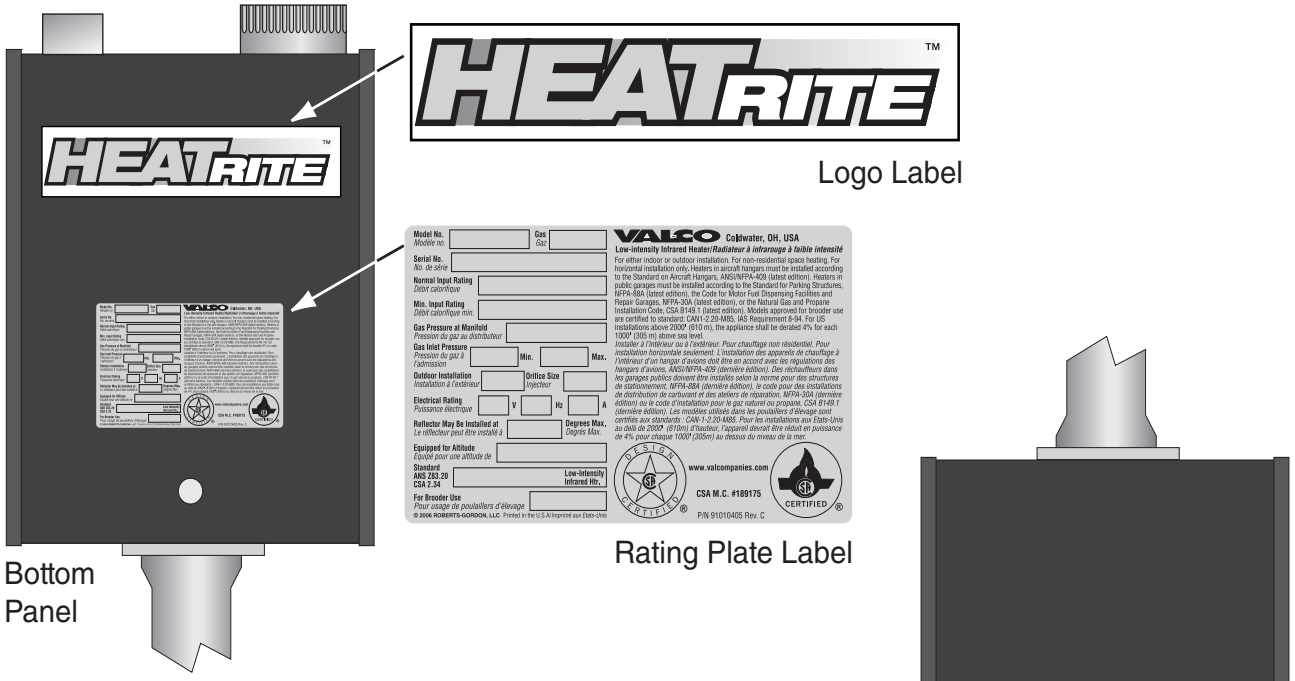

Description	Part Number
Logo Label	91013205
Rating Plate Label	91010405
Gas Connection Label	91018122
Proposition 65 Label	91070015

FIGURE 2: Side and Back Panel Label Placement

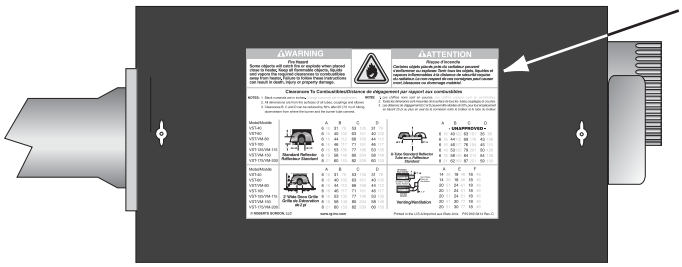

Control Side Panel

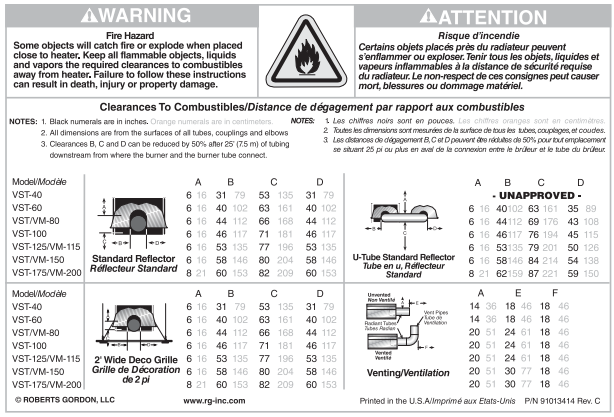

Clearances to Combustibles Label

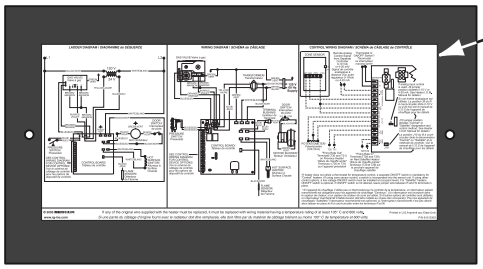

Control Side Panel (Inside)

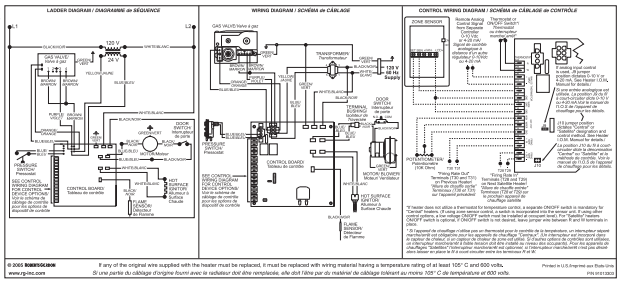

Wiring Label

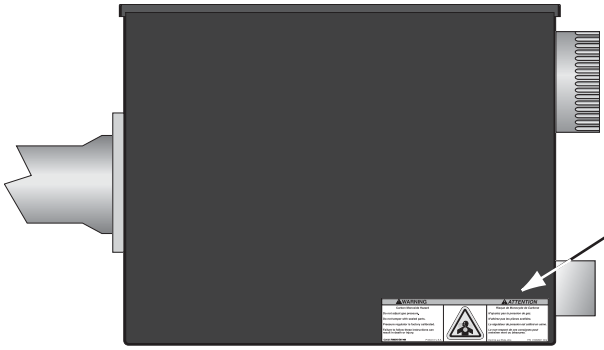

Inside Bottom Panel

Carbon Monoxide Hazard Label

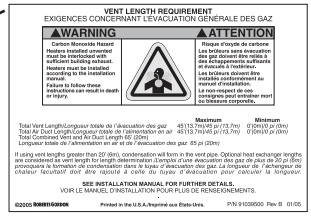

Vent Length Label

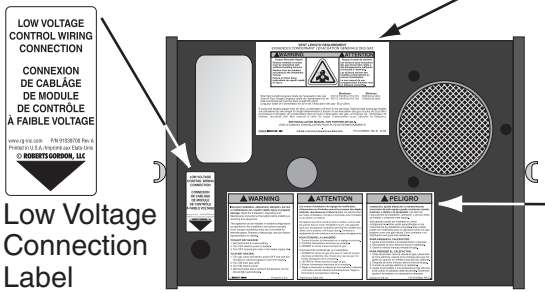

Low Voltage Connection Label

Back Panel

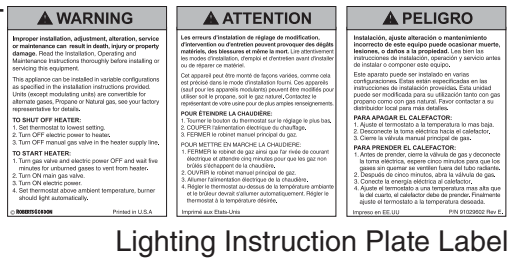

Lighting Instruction Plate Label

Description	Part Number
Clearances to Combustibles Label	91013414
Wiring Label	91013303
Carbon Monoxide Hazard Label	91039501
Low Voltage Connection Label	91039700
Vent Length Label	91039500
Lighting Instruction Plate Label	91029602

SECTION 2: INSTALLER RESPONSIBILITY

The installer is responsible for the following:

- To install the heater, as well as the gas and electrical supplies, in accordance with applicable specifications and codes. Val-Co recommends the installer contact a local Building Inspector or Fire Marshal for guidance.
- To use the information given in a layout drawing and in the manual together with the cited codes and regulations to perform the installation.
- To install the heater in accordance with the clearances to combustibles.
- To furnish all needed materials not furnished as standard equipment.
- To plan location of supports.
- To provide access to burners for servicing on all sides, for burner removal.
- To provide the owner with a copy of this installation, operation and service manual.
- To never use heater as support for a ladder or other access equipment and never hang or suspend anything from heater.
- To ensure there is adequate air circulation around the heater and to supply air for combustion, ventilation and distribution in accordance with local codes.
- To safely and adequately install heater using materials with a minimal working load of 75 lbs (33 kg).
- To ensure the heater is placed in a approved application.

2.1 Wall Tag

A laminated wall tag is available for the heater as a permanent reminder of the safety instructions and the importance of the required clearances to combustibles. Please contact Val-Co or your VAL-CO independent distributor to obtain the wall tag. Affix the tag by peeling off the backing of the adhesive strips on the rear surface and position the tag on a wall near the heater (e.g. thermostat or VAL-CO Controller).

A copy of the wall tag (P/N 91037917) is illustrated on the back cover. For an immediate solution, you may affix this copy on the wall near the heater.

Know your model number and installed configuration. Model number and installed configuration are found on the burner and in the Installation, Operation and Service Manual. *See Page 6, Figure 3 through Page 8, Figure 9*. Write the proper clearance dimensions in permanent ink according to your model number and configuration in the open spaces on the tag.

2.2 Brooder Wall Tag

ROBERTS GORDON

⚠ ATTENTION

VENTILATION REQUIREMENTS

Be sure the air inlet grills, louvers and dampers are inspected regularly and that they are clear and free of dust, dirt, snow, ice, frost and other foreign material so that air may freely enter into the building to provide adequate combustion and ventilating air.

For proper and safe operation of the brooder installation, there shall be provided a combined infiltration and natural and mechanical ventilation rate of not less than 1/4 S.C.F.M. (standard cubic foot per minute) per bird.

⚠ ATTENTION

EXIGENCES RELATIVES À LA VENTILATION

S'assurer que les grilles d'entrée d'air, volets et évents sont inspectés régulièrement et qu'ils sont exempts de poussière, de saleté de neige, de glace, de gel et de toute autre matière étrangère afin que l'air puisse entrer librement dans le bâtiment pour aider à la combustion et à la ventilation.

Pour une installation adéquate et sécuritaire du couvoir, le taux combiné d'infiltration et de ventilation naturelle et mécanique ne devra pas être inférieur à 1/4 de P.C.S.M. (pied cube standard par minute) par oiseau.

© 1999 ROBERTS GORDON Printed in the U.S.A./Imprimé aux Etats-Unis P/N 91039300 Rev A

2.3 Corrosive Chemicals

⚠ CAUTION

Product Damage Hazard

Do not use heater in area containing corrosive chemicals.

Refer to appropriate Material Safety Data Sheets (MSDS).

Failure to follow these instructions can result in product damage.

Val-Co cannot be responsible for ensuring that all appropriate safety measures are undertaken prior to installation; this is entirely the responsibility of the

installer. It is essential that the contractor, the sub-contractor, or the owner identifies the presence of combustible materials, corrosive chemicals or halogenated hydrocarbons* anywhere in the premises.

**** Halogenated Hydrocarbons** are a family of chemical compounds characterized by the presence of halogen elements (fluorine, chlorine, bromine, etc.). These compounds are frequently used in refrigerants, cleaning agents, solvents, etc. If these compounds enter the air supply of the burner, the life span of the heater components will be greatly reduced. An outside air supply must be provided to the burners whenever the presence of these compounds is suspected. Warranty will be invalid if the heater is exposed to halogenated hydrocarbons.*

2.4 National Standards and Applicable Codes

All appliances must be installed in accordance with the latest revision of the applicable standards and national codes. This refers also to the electric, gas and venting installation. Note: Additional standards for installations in Public Garages, Aircraft Hangars, etc. may be applicable.

SECTION 3: CLEARANCES TO COMBUSTIBLES

3.1 Required Clearances to Combustibles

Clearances are the required distances that combustible objects must be away from the heater to prevent serious fire hazards. Combustibles are materials, that may catch on fire and include common items such as wood, paper, rubber, fabric, etc. **Maintain clearances to combustibles at all times for safety.**

Clearances for all heater models are located on the burner of the heater and *on Page 6, Figure 3 through Page 8, Figure 9* in this manual. Check the clearances on each burner for the model heater being installed to make sure the product is suitable for your application and the clearances are maintained. Read and follow the safety guidelines below:

- Keep gasoline or other combustible materials including flammable objects, liquids, dust or vapors away from this heater or any other appliance
- The stated clearance to combustible represents a surface temperature of 90° F (50°C) above room temperature. Building materials with a low heat tolerance (such as plastics, vinyl siding, canvas,triply, etc.) may be subject to degradation at lower temperatures. It is the installer's responsibility to assure that adjacent materials are protected from degradation.
- Maintain clearances from heat sensitive equipment and workstations.
- Maintain clearances from vehicles parked below the heater.
- Maintain clearances from swinging and overhead doors, overhead cranes, vehicle lifts, partitions, storage racks, hoists, building construction, etc.

⚠WARNING

Fire Hazard

Keep all flammable objects, liquids and vapors the minimum required clearances to combustibles away from heater.

Some objects will catch fire or explode when placed close to heater.

Failure to follow these instructions can result in death, injury or property damage.

- In locations used for the storage of combustible materials, signs must be posted to specify the maximum permissible stacking height to maintain required clearances from the heater to the combustibles. Signs must be posted adjacent to the heater thermostat. In the absence of a thermostat, signs must be posted in a conspicuous location.
- Consult local Fire Marshal, Fire Insurance Carrier or other authorities for approval of proposed installation when there is a possibility of exposure to combustible airborne materials or vapors.
- Hang heater in accordance to the minimum suspension requirements *on Page 13, Figure 11*.
- If the radiant tubes must pass through the building structure, be sure that adequate sleeving and fire stop is installed to prevent scorching and/or fire hazard.

NOTE: 1. All dimensions are from the surfaces of all tubes, couplings and elbows.
2. Clearances B, C and D can be reduced by 50% after 25' (7.5 m) of tubing downstream from where the burner and burner tube connect.

FIGURE 3: STANDARD REFLECTOR

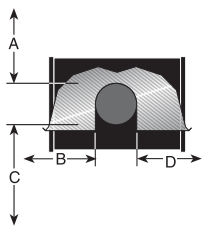

Model	(inches) A	B	C	D	(centimeters) A	B	C	D
VM-80	6	44	66	44	16	112	168	112
VM-115	6	53	77	53	16	135	196	135
VM-150	6	58	80	58	16	146	204	146
VM-200	8	60	82	60	21	153	209	153

NOTE: 1. All dimensions are from the surfaces of all tubes, couplings and elbows.
2. Clearances B, C and D can be reduced by 50% after 25' (7.5 m) of tubing downstream from where the burner and burner tube connect.

FIGURE 4: ONE SIDE REFLECTOR

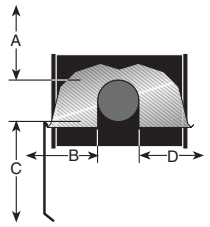

	(inches)				(centimeters)			
Model	**A**	**B**	**C**	**D**	**A**	**B**	**C**	**D**
VM-80	6	10	70	62	16	26	178	159
VM-115	6	10	83	75	16	26	211	191
VM-150	6	10	86	79	16	26	219	202
VM-200	8	10	88	84	21	26	224	214

FIGURE 5: TWO SIDE REFLECTORS

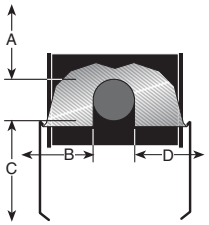

	(inches)				(centimeters)			
Model	**A**	**B**	**C**	**D**	**A**	**B**	**C**	**D**
VM-80	6	29	72	29	16	74	183	74
VM-115	6	37	84	37	16	94	214	94
VM-150	6	40	88	40	16	102	224	102
VM-200	8	46	91	46	21	117	232	117

FIGURE 6: U-TUBE, STANDARD REFLECTOR

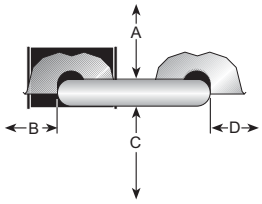

	(inches)				(centimeters)			
Model	**A**	**B**	**C**	**D**	**A**	**B**	**C**	**D**
VM-80	6	44	69	43	16	112	176	112
VM-115	6	53	79	49	16	135	201	128
VM-150	6	58	84	54	16	146	214	138
VM-200	8	62	87	59	21	159	221	150

NOTE: 1. All dimensions are from the surfaces of all tubes, couplings and elbows.
2. Clearances B, C and D can be reduced by 50% after 25' (7.5 m) of tubing downstream from where the burner and burner tube connect.

FIGURE 7: 2-FOOT DECO GRILLE AND PROTECTIVE GRILLE

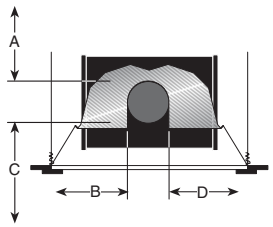

Model	(inches) A	B	C	D	(centimeters) A	B	C	D
VM-80	6	44	66	44	16	112	168	112
VM-115	6	53	77	53	16	135	196	135
VM-150	6	58	80	58	16	146	204	146
VM-200	8	60	82	60	21	153	209	153

FIGURE 8: LOWER CLEARANCE SHIELD*

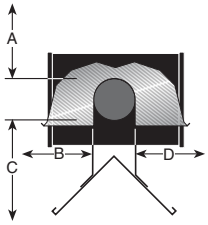

Model	(inches) A	B	C	D	(centimeters) A	B	C	D
VM-80	6	46	38	46	16	117	97	117
VM-115	6	62	48	62	16	159	122	159
VM-150	6	65	50	63	16	161	127	161
VM-200	**- UNAPPROVED -**				**- UNAPPROVED -**			

*When installed in the first 10' (3 m).

FIGURE 9: VENTING

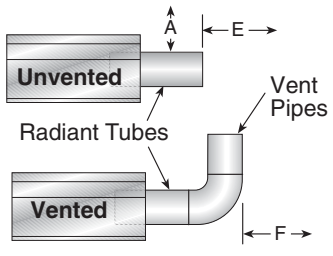

Model	(inches) A	E	F	(centimeters) A	E	F
VM-80	20	24	18	51	61	46
VM-115	20	24	18	51	61	46
VM-150	20	30	18	51	77	46
VM-200	20	30	18	51	77	46

SECTION 4: NATIONAL STANDARDS AND APPLICABLE CODES

4.1 Gas Codes

The type of gas appearing on the nameplate must be the type of gas used. Installation must comply with national and local codes and requirements of the local gas company.

United States: Refer to National Fuel Gas Code NFPA 54/ANSI Z223.1 - latest revision.

Canada: Refer to Natural Gas and Propane Installation Code CSA B149.1 - latest revision.

4.2 Aircraft Hangars

Installation in aircraft hangars must be in accordance with the following codes:

United States: Refer to Standard for Aircraft Hangars, NFPA 409 - latest revision.

Canada: Refer to Natural Gas and Propane Installation Code CSA B149.1 - latest revision.

In aircraft storage and servicing areas, heaters shall be installed at least 10' (3 m) above the upper surface of wings or of engine enclosures of the highest aircraft which may be housed in the hangar. The measurement shall be made from the wing or engine enclosure (whichever is higher from the floor) to the bottom of the heater.

• In shops, offices and other sections of aircraft hangars communicating with aircraft storage or servicing areas, heaters shall be installed not less than 8' (2.4 m) above the floor.

• Suspended or elevated heaters shall be so located in all spaces of aircraft hangars that they shall not be subject to injury by aircraft, cranes, movable scaffolding or other objects. Provisions shall be made to assure accessibility to suspended heaters for recurrent maintenance purposes.

4.3 Public Garages

Installation in garages must be in accordance with the following codes:

United States: Refer to Standard for Parking Structures NFPA 88A - latest revision or the Code for Motor Fuel Dispensing Facilities and Repair Garages, NFPA 30A - latest revision.
Canada: Refer to Natural Gas and Propane Installation Code CSA B149.1 - latest revision.

• Heaters must not be installed less than 8' (2.4 m) above the floor. Minimum clearances to combustibles must be maintained from vehicles parked below the heater.

• When installed over hoists, minimum clearances to combustibles must be maintained from the upper most point of objects on the hoist.

4.4 Electrical

The heater must be electrically grounded in accordance with the following codes:

United States: Refer to National Electrical Code®, NFPA 70 - latest revision. Wiring must conform to the most current National Electrical Code®, local ordinances and any special diagrams furnished.

Canada: Refer to Canadian Electrical Code, CSA C22.1 Part 1 - latest revision.

4.5 Venting

The venting must be installed in accordance with the requirements within this manual and the following codes:

United States: Refer to National Fuel Gas Code NFPA 54/ANSI Z223.1 - latest revision.

Canada: Refer to Natural Gas and Propane Installation Code CSA B149.1 - latest revision.

4.6 High Altitude

These heaters are approved for installations up to 2000' (610 m)(US), 4500' (1370 m)(Canada) without modification. Consult factory if US installation is above 2000' (610 m) or Canadian installation is above 4500' (1370 m).

SECTION 5: MAJOR COMPONENTS

FIGURE 10: Major Component Descriptions

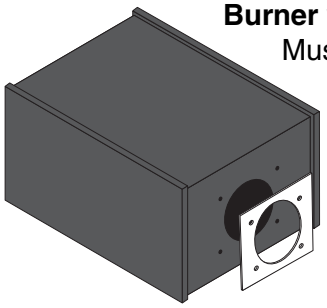

Burner with Tube Gasket
Must be installed with the flame observation window facing down.

Reflector (Aluminum or Stainless Steel)
Alternate overlap as shown on overview and *on Page 15, Figure 13*.
Minimum overlap is 6" (16 cm).

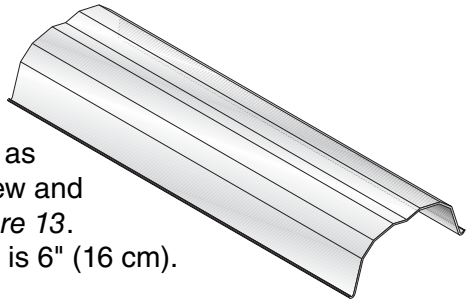

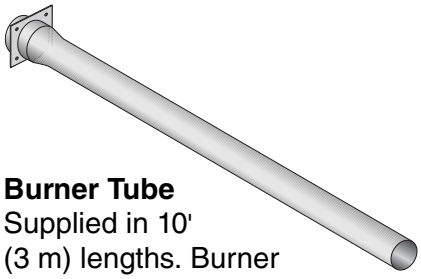

Burner Tube
Supplied in 10' (3 m) lengths. Burner tube is always the first tube after the burner.

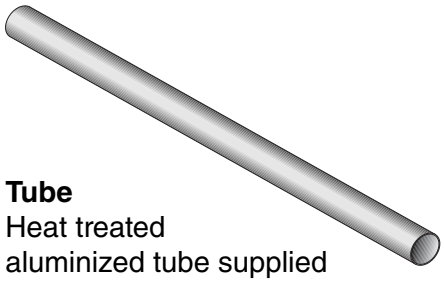

Tube
Heat treated aluminized tube supplied in 10' (3 m) lengths.

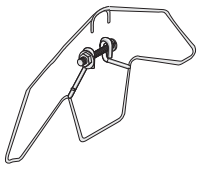

Tube and Reflector Hanger, Wide Pattern with Clamp Package
Position this hanger no more than 4" (10 cm) away from the burner.

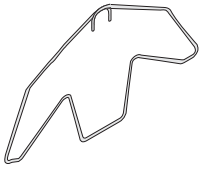

Tube and Reflector Hanger, Wide Pattern
Suspend system from these hangers.

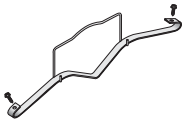

Reflector Support Strap, Wide Pattern & Wire Form

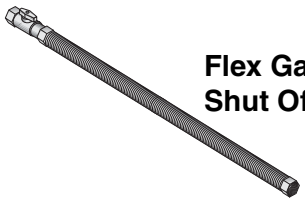

Flex Gas Line with Shut Off Cock

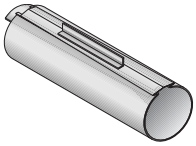

Coupling Assembly with Lock

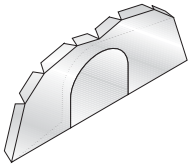

Reflector End Cap
Punch out center section to accommodate tube.

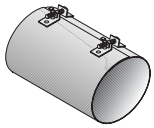

Vent Adapter

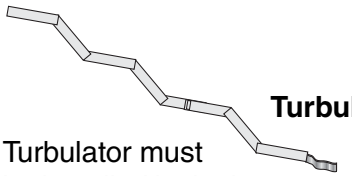

Turbulator

Turbulator must be installed in the last standard section of tube. Turbulator is not required on the VM-200. For installation *see Page 18, Section 6.4*.

5.1 Standard Parts List

Table 1: Contents of Burner Carton

Part No.	Description	VM-80	VM-115	VM-150	VM-200
VM34XXXXX	Burner Assembly (Rate and Fuel Varies)	1	1	1	1
02568200	Gasket (Burner to Burner Tube)	1	1	1	1
VM34100NA	Installation, Operation and Service Manual	1	1	1	1
94273914	Hex Head Bolts 5/16-18 Rolok	4	4	4	4
96411600	Split Lock Washer	4	4	4	4
91201708	Pipe Nipple (Black) 1/2" NPT x 4"	1	1	1	1
*91412200	Flexible Stainless Steel Gas Hose - 1/2" NPT (US Models Only)	1	1	-	-
*91412204	Flexible Stainless Steel Gas Hose - 3/4" NPT (US Models Only)	-	-	1	1
03051503	Turbulator Adapter	1	1	1	-
03051504	Turbulator, Aluminized Steel	3	3	1	-
91317310	Wire Terminal Receptacle.187 x.032	8	8	8	8
91309605	Cable Grommet with Tie	1	1	1	1

*Canadian Models: Rubber (Type 1) Gas Hoses available as an accessory. *See Page 37, Section 9*.

Table 2: Contents of Wide Pattern Core and Wide Pattern Extension Packages

		Wide Pattern Core Packages (Aluminized)				Wide Pattern Extension Packages (Aluminized)			
Part No.	Description	10' (3m)	20' (6m)	30' (9m)	40' (12m)	10' (3m)	20' (6m)	30' (9m)	40' (12m)
91409408	Tube, HT Aluminized, 10' (3m)	-	1	2	3	1	2	3	4
03051101	Burner Tube, ALUMI-THERM® Steel, 10' (3m)	-	-	1	1	-	-	-	-
03051601	Burner Tube, HT ALUMI-THERM® Steel, 10' (3m)	1	1	-	-	-	-	-	-
01312700	Coupling Assembly	-	1	2	3	1	2	3	4
02750303	Standard Reflector, 8' (3.5m)	2	3	4	6	2	3	4	6
02750800	End Cap	2	2	2	2	-	-	-	-
03090101	Tube and Reflector Hanger, Wide Pattern	2	3	4	5	1	2	3	4
91907302	S-Hook	2	3	4	5	1	2	3	4
03050011	Reflector Support Package, Wide Pattern (Strap, Wire Form, Screws)	1	2	3	5	2	3	4	6
91107720	U-Clip Package	1	1	1	1	1	1	1	1
90502700	Vent Adapter	1	1	1	1	-	-	-	-
01318901	Tube Clamp Package	1	1	1	1	-	-	-	-
Part Number		CPW10ALUM	CPW20ALUM	CPW30ALUM	CPW40ALUM	EXPW10ALUM	EXPW20ALUM	EXPW30ALUM	EXPW40ALUM

Table 3: VM-Series Component Package Guide

Model	Tubing Length	Wide Pattern Core Packages
	Minimum	Aluminized
VM-80	20' (6m)	CPW20ALUM
VM-115	30' (9m)	CPW30ALUM
VM-150	40' (12m)	CPW40ALUM
VM-200	50' (15m)	CPW30ALUM + EXPW20ALUM

Additional tubing length may be added to heater. Tubing must be heat-treated, aluminized or porcelain coated. Any additional tubing lengths are considered as vent length for length determination. Maximum venting length for minimum heater length is 45' (13.7 m) total.

SECTION 6: HEATER INSTALLATION

⚠WARNING

Severe Injury Hazard

Secure burner to burner tube with bolts and lockwashers.

Hang heater with materials with a minimum working load of 75 lbs (33 kg).

Failure to follow these instructions can result in death, injury or property damage.

⚠WARNING

Cut/Pinch Hazard

Wear protective gear during installation, operation and service.

Edges are sharp.

Failure to follow these instructions can result in injury.

To ensure your safety, and comply with the terms of the warranty, all units must be installed in accordance with these instructions.

The gas or the electrical supply lines must not be used to support the heater.

Do not locate the gas or electric supply lines directly over the path of the flue products from the heater.

The heater must be installed in a location that it is readily accessible for servicing.

The heater must be installed in accordance with clearances to combustibles as indicated on the heater and in this instruction manual.

The gas inlet pressure must be maintained as indicated on the rating plate.

Typical installation configurations are shown *on Page 13, Figure 11*.

Expansion and contraction of the tube dictates that the minimum suspension lengths in the table *on Page 13, Figure 11* be maintained.

FIGURE 11: Critical Hanger Placement

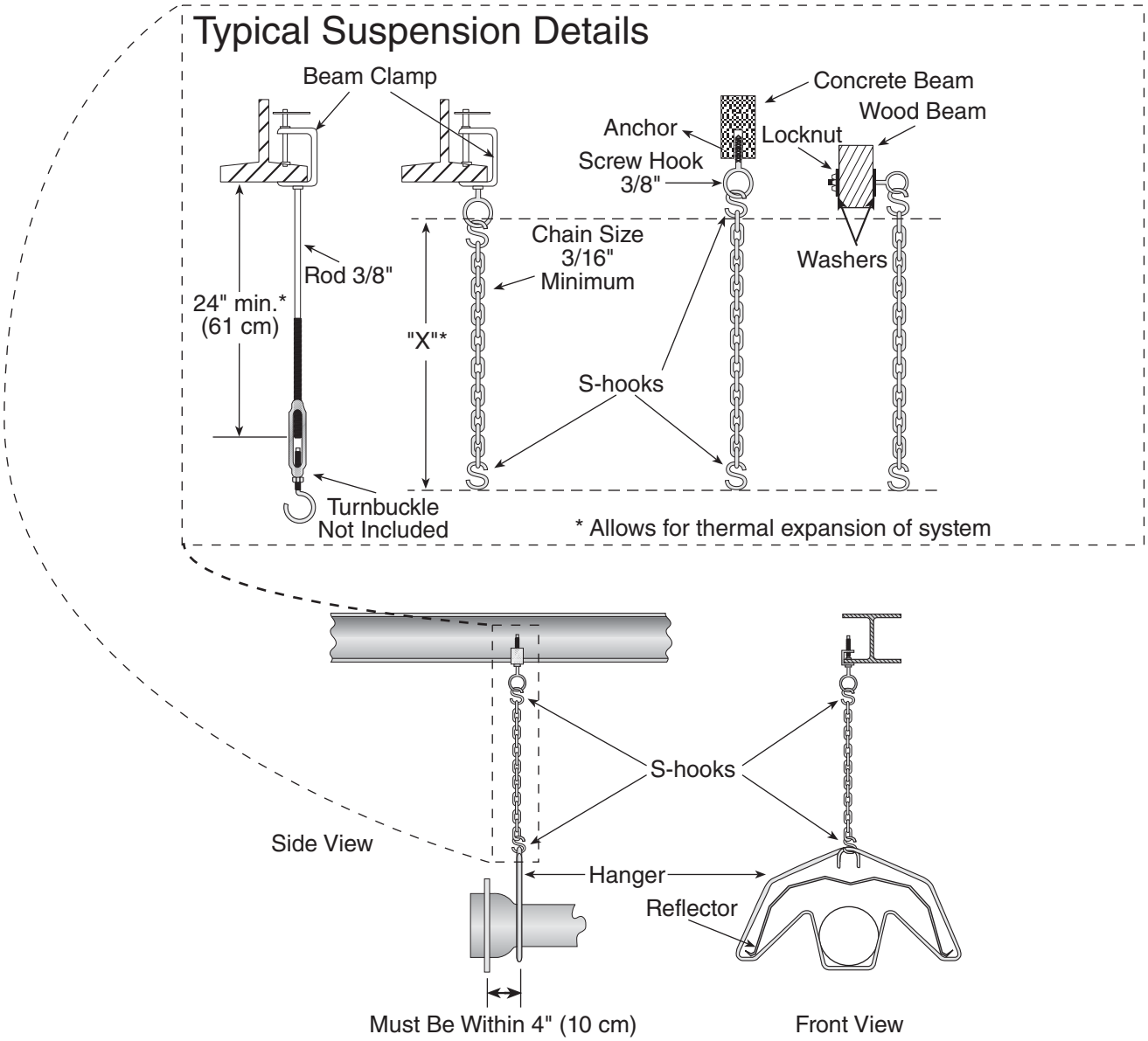

Description	Part Number
S-Hook	91907302
Tube/Reflector Hanger, Wide Pattern	03090101

Run Length	Typical Expansion	Minimum "X" Length
10' - 50'	±1" (3 cm)	12"
51' - 60'	±2" (5 cm)	18"
61' - 70'	±3" (8 cm)	24"

FIGURE 12: Linear Heater Assembly Overview

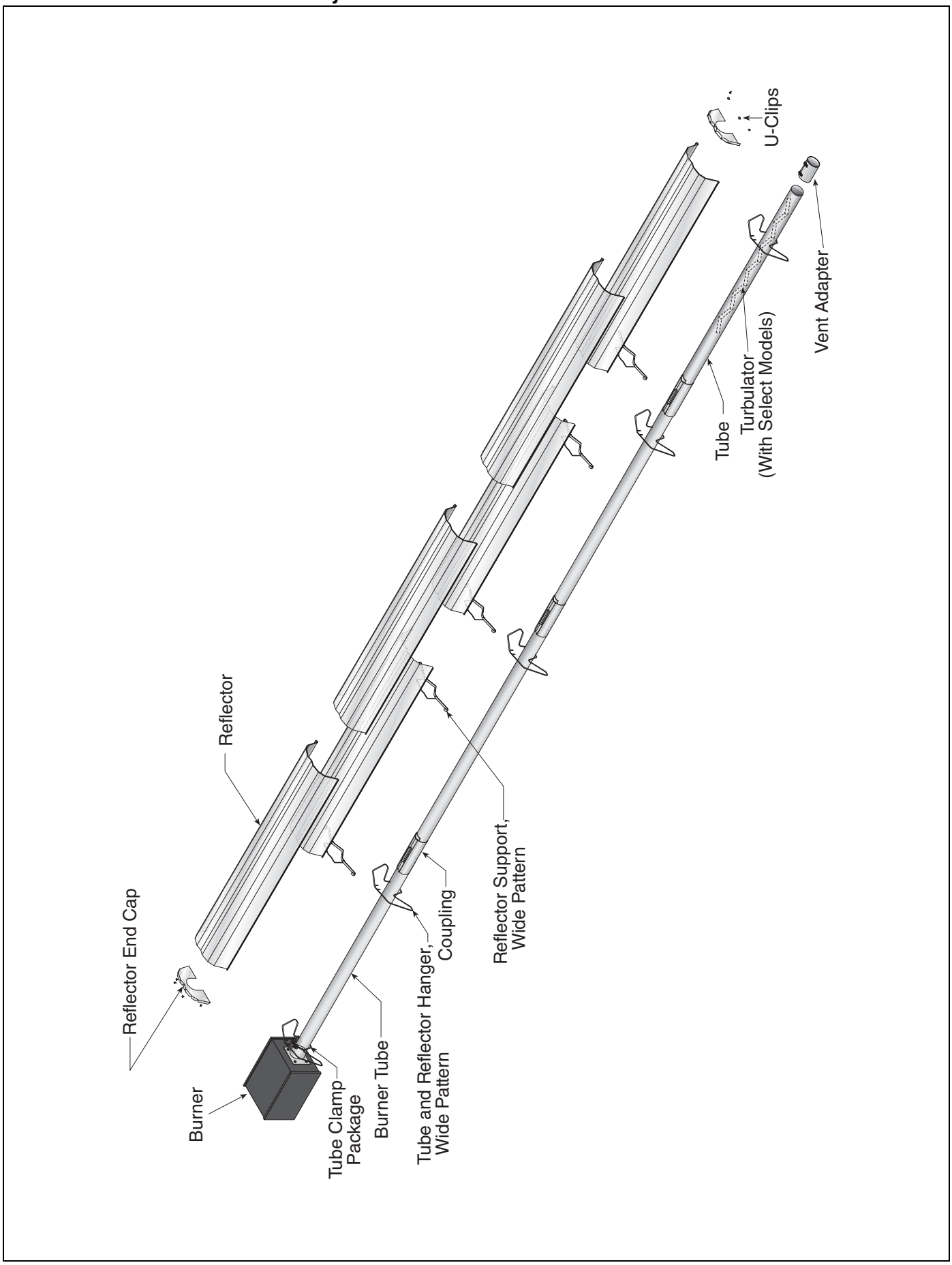

FIGURE 13: Linear Heater Layout Overview

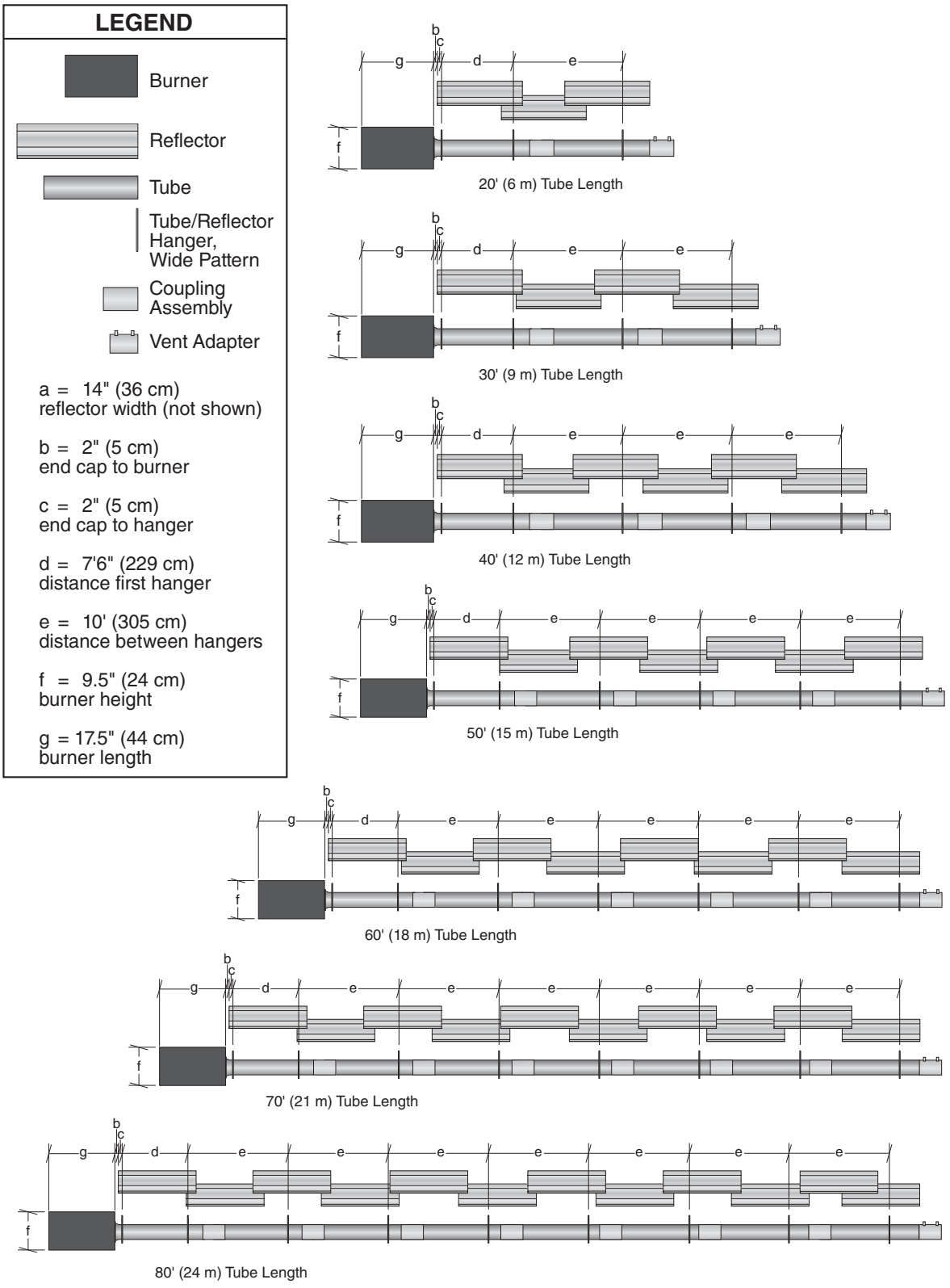

Step 6.1 Burner Tube Installation

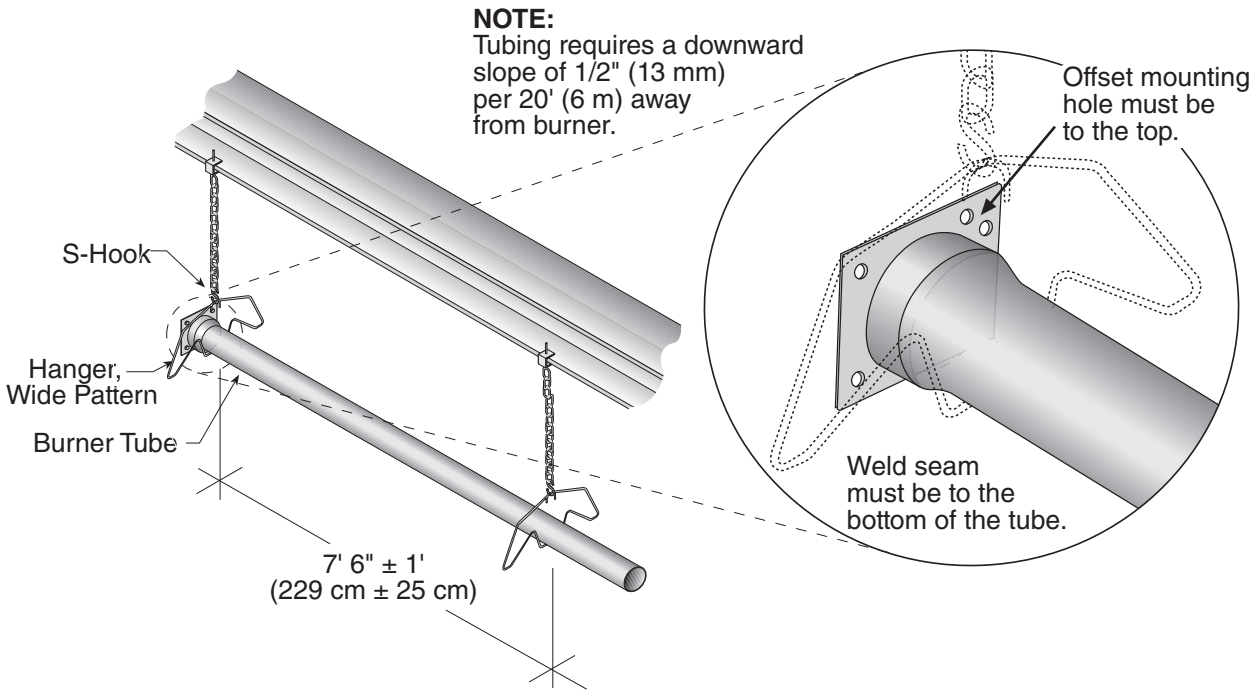

Description	Part Number
Burner Tube	03051XXX
S-Hook	91907302
Tube/Reflector Hanger, Wide Pattern	03090101

Step 6.2 Tube Clamp Package Installation

Description	Part Number
Tube Clamp Package	**01318901**
Tube Clamp	01396801
Bolt	97113940
Flat Washer	95211600
Nut	92113900

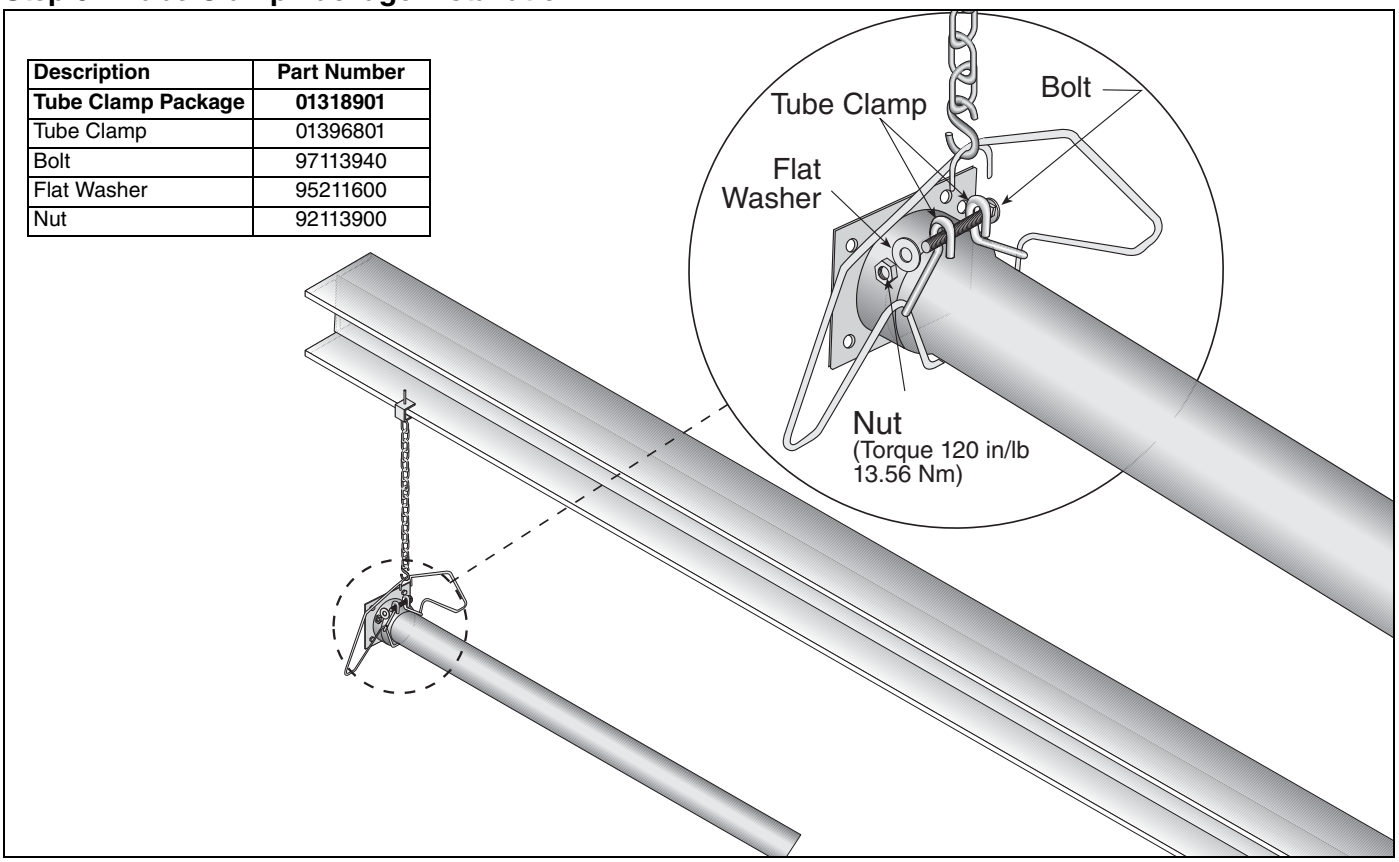

Step 6.3 Coupling and Tube Assembly

A Close coupling with tab.

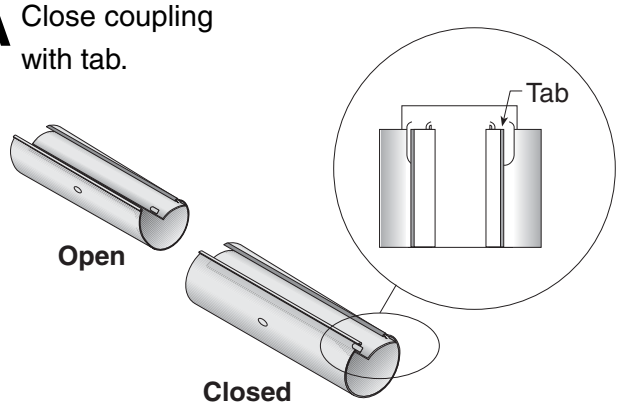

B Start Slide bar/Coupling Lock.

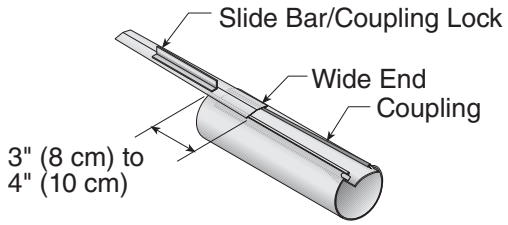

C Insert tubes into coupling.

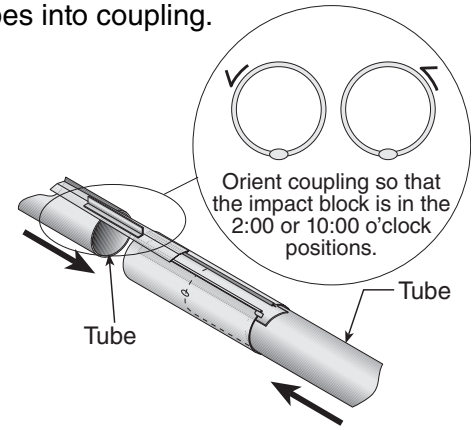

D Tighten coupling to join tubes.

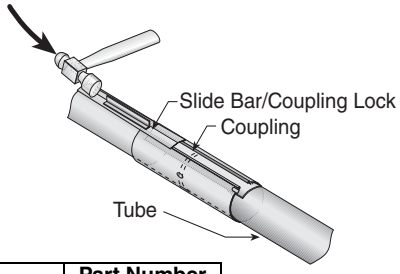

Description	Part Number
Coupling	01329600
Slide bar/Coupling Lock	01329700
Tube	91409XXX

Step 6.3.1 Coupling and Tube Assembly (Continued)

Tighten slide bar as shown below.

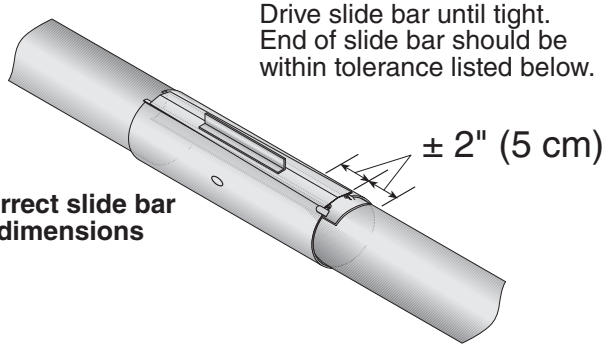

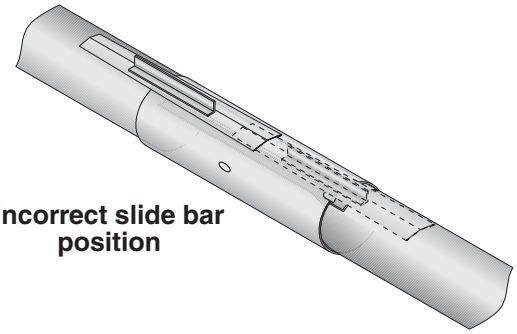

- **Repeat Step 6.3 A - D until all tubes are assembled.** ***See Page 18, Section 6.3.2*****.**

Step 6.3.2 Coupling and Tube Assembly (Continued)

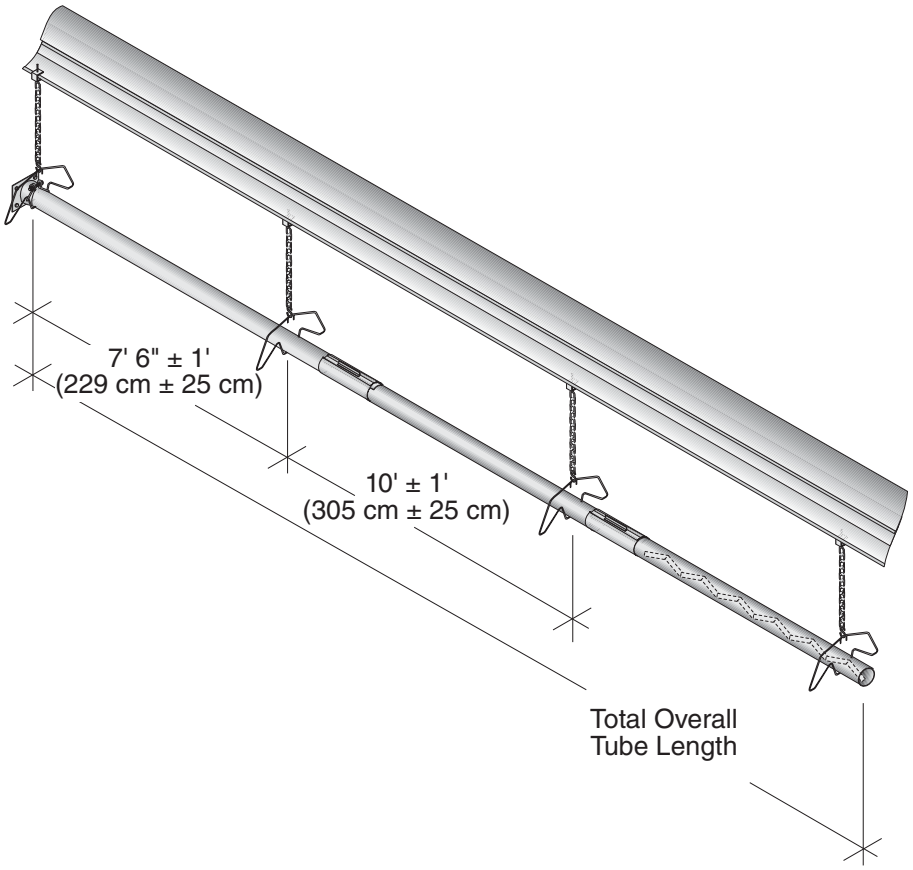

Model	Tube Length Minimum
VM-80	20' (6 m)
VM-115	30' (9 m)
VM-150	40' (12 m)
VM-200	50' (15 m)

Step 6.4 Turbulator Installation

Turbulator must be installed in the last standard section of tube. Turbulator is not required on the VM-200.

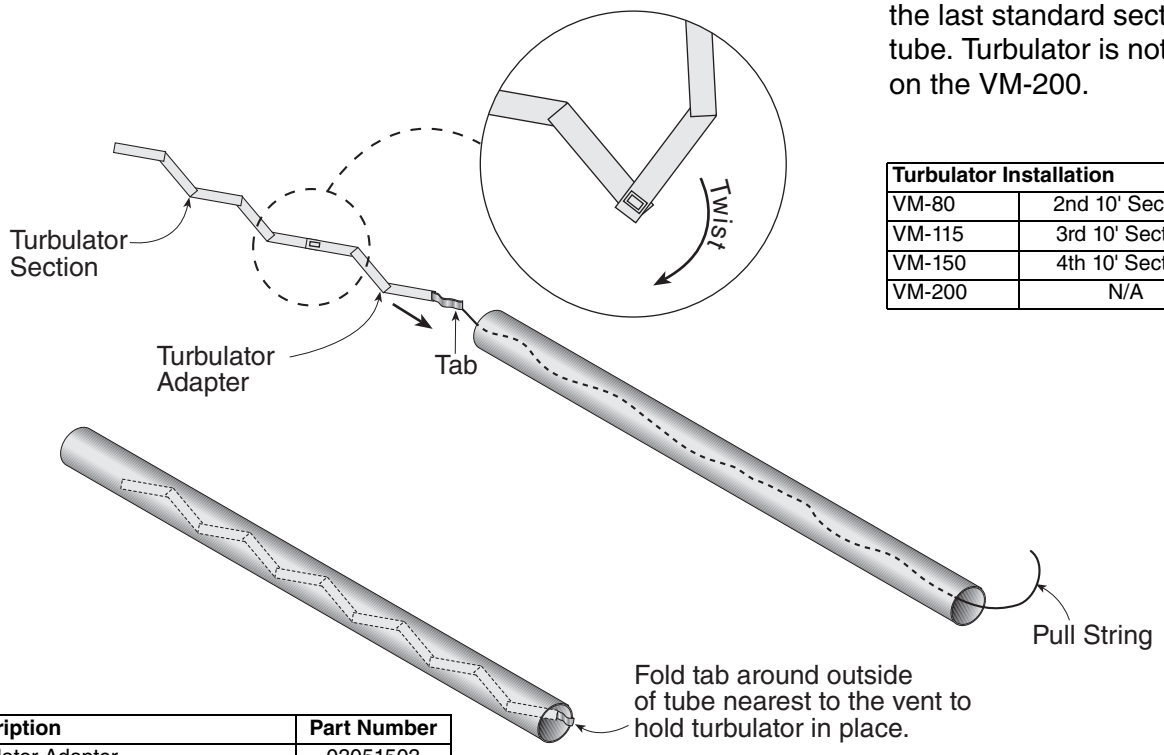

Turbulator Installation	
VM-80	2nd 10' Section
VM-115	3rd 10' Section
VM-150	4th 10' Section
VM-200	N/A

Description	Part Number
Turbulator Adapter	03051503
Turbulator Section	03051504
Tube	91409XXX

6.5 Reflector Installation

⚠ WARNING

Fire Hazard

Support reflector with reflector hanger and support strap.

Reflector must not touch tube.

Failure to follow these instructions can result in death, injury or property damage.

NOTE: All tube surfaces must be covered by a reflector, except for a U-Tube.

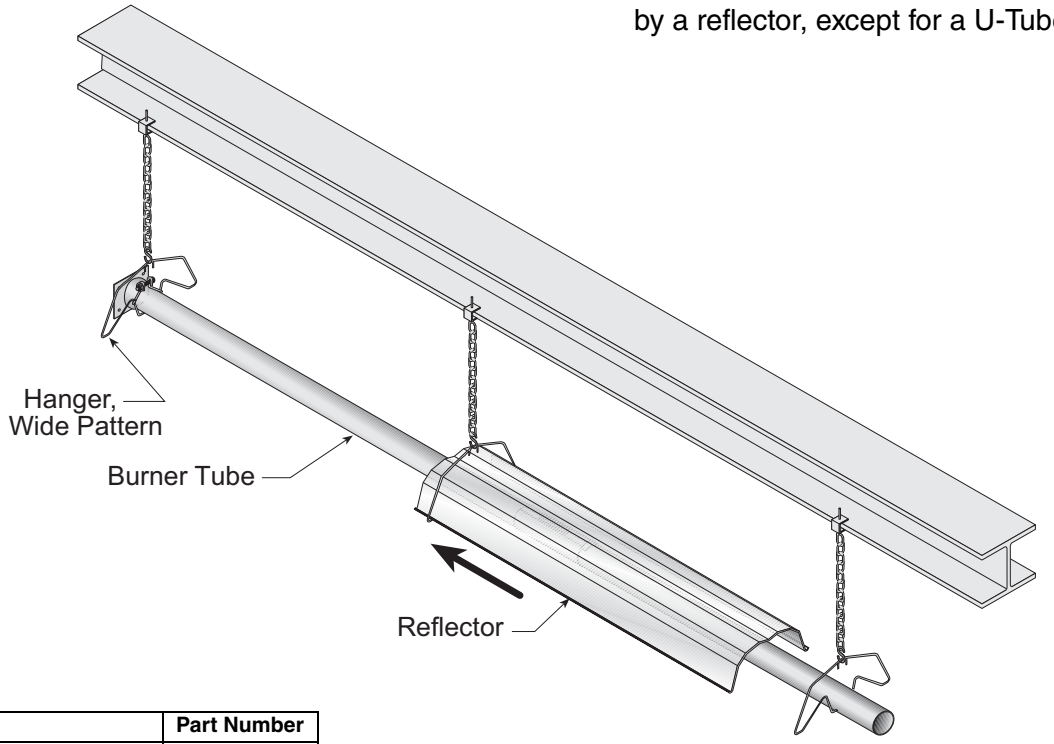

Description	Part Number
Tube/Reflector Hanger, Wide Pattern	03090101
Burner Tube	03051XXX
Reflector	02750303

Step 6.5.1 Reflector, U-Clip and Reflector Support Installation

The pictorial drawings of the heater construction in *Section 6* are schematic only and provide a general guideline of where hangers, reflector supports and U-clips are to be installed.

To ensure proper expansion and contraction movement of the reflectors, a combination of U-clips and reflector supports are used. The positioning of reflector supports and U-clips depends on the individual installation. Use either pop rivets or sheet metal screws instead of u-clips when installing end caps and joint pieces in areas where impact and high wind may be a factor. The following rules must be observed.

1. The first reflector after the burner must be affixed in the middle of the reflector with a reflector support and tight screws.

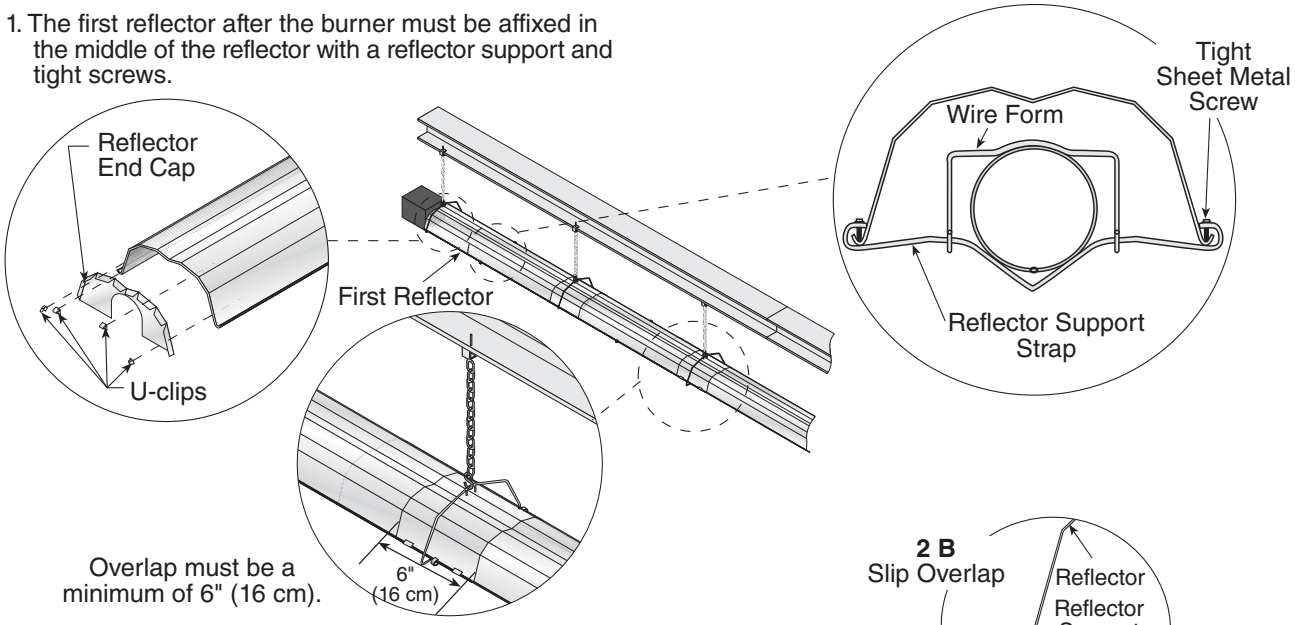

2. The overlap at the first and second reflector is a **slip overlap.** Thereafter, every third reflector joint is a slip overlap. A slip overlap is achieved by either:
   a.) both reflectors lay inside a hanger. (No reflector support needed.)
   b.) using a reflector support with loose screws at the reflector overlap.

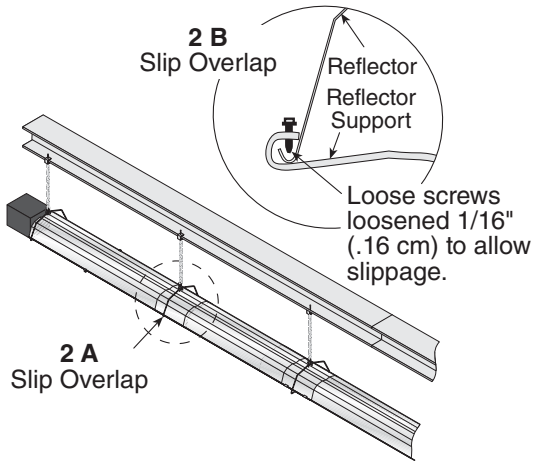

3. The remaining reflector overlaps require a **non-slip overlap** connection. To affix the reflectors together in a non-slip overlap either:
   a.) use reflector support and tight screws.
   b.) if both reflectors lay inside a hanger, u-clips or sheet metal screws may be used.

   This section of three reflectors joined together must be affixed to the tube with at least one reflector support with tight screws.

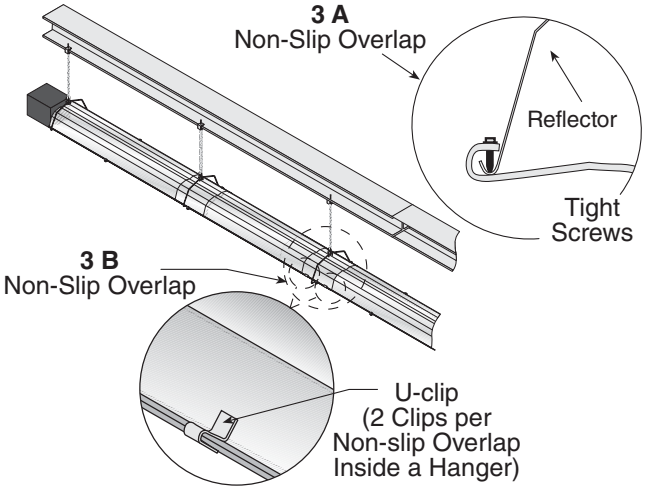

Description	Part Number
Reflector Support Package, Wide Pattern	**03050011**
Wire Form	91908004
Reflector Support Strap, Wide Pattern	03050001
Screw #8 x 3/4"	94320812
U-Clip Package	91107720
Reflector End Cap	027508XX

Step 6.6 Burner Installation

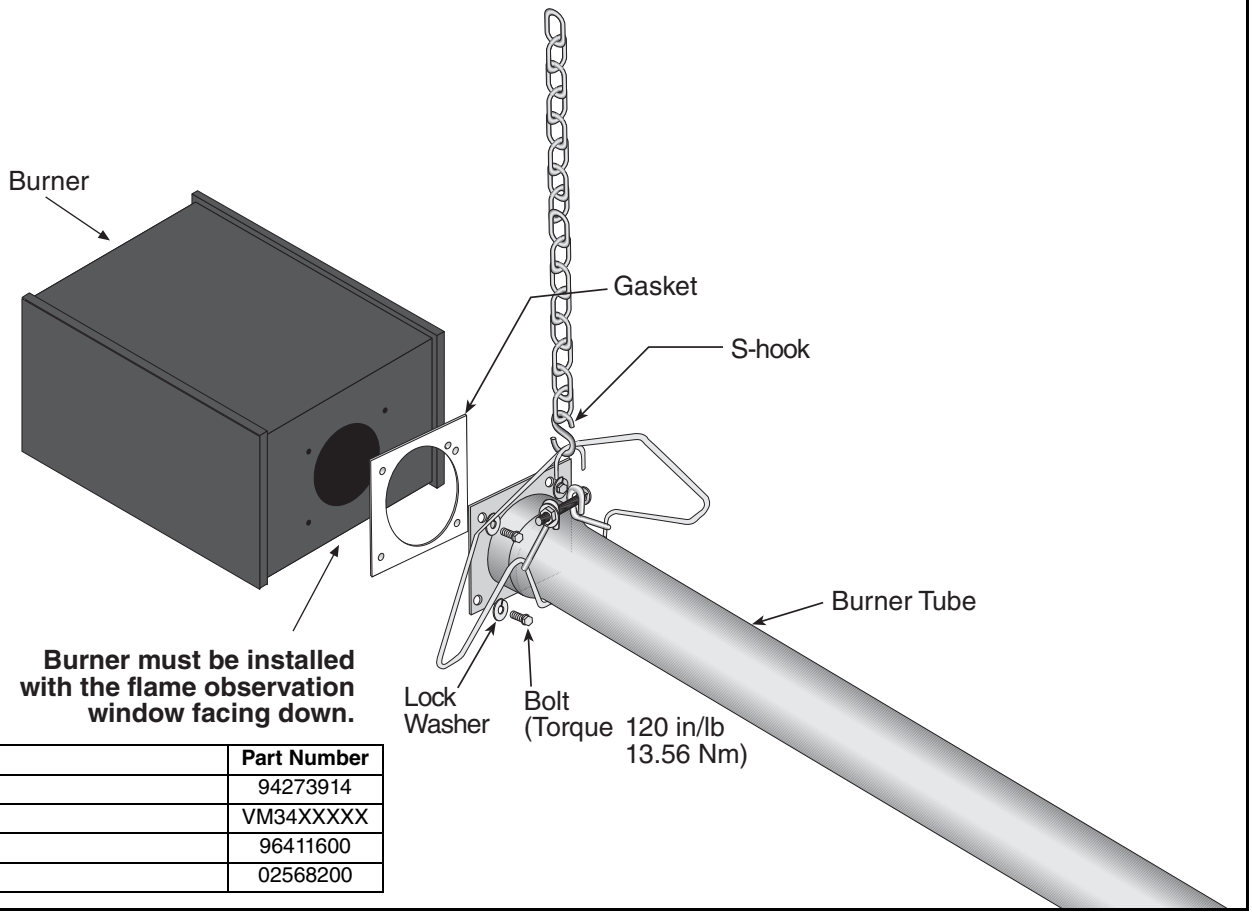

Description	Part Number
Bolt	94273914
Burner	VM34XXXXX
Lock Washer	96411600
Gasket	02568200

SECTION 7: OPTIONAL HEATER ACCESSORIES

⚠WARNING

Cut/Pinch Hazard

Wear protective gear during installation, operation and service.

Edges are sharp.

Failure to follow these instructions can result in injury.

7.1 U-Tube Configuration

Heaters are approved for optional U-Tube configurations.

The U-Tube may be installed in a standard horizontal position. When using a U-Tube configuration, the following additional rules must be adhered to:

- A minimum of 10' (3 m) on VM-80 and a minimum of 15' (4.5 m) on VM-115/150/200 is required between the burner and the U-Tube.
- The correct turbulator (*See Page 18, Figure 6.4*) must be installed in the last standard section of tube.
- The burner must never be operated in a tilted position.
- The heater must be properly supported at all locations. *See Page 24, Figure 15*.

FIGURE 14: U-Tube Heater Assembly Overview

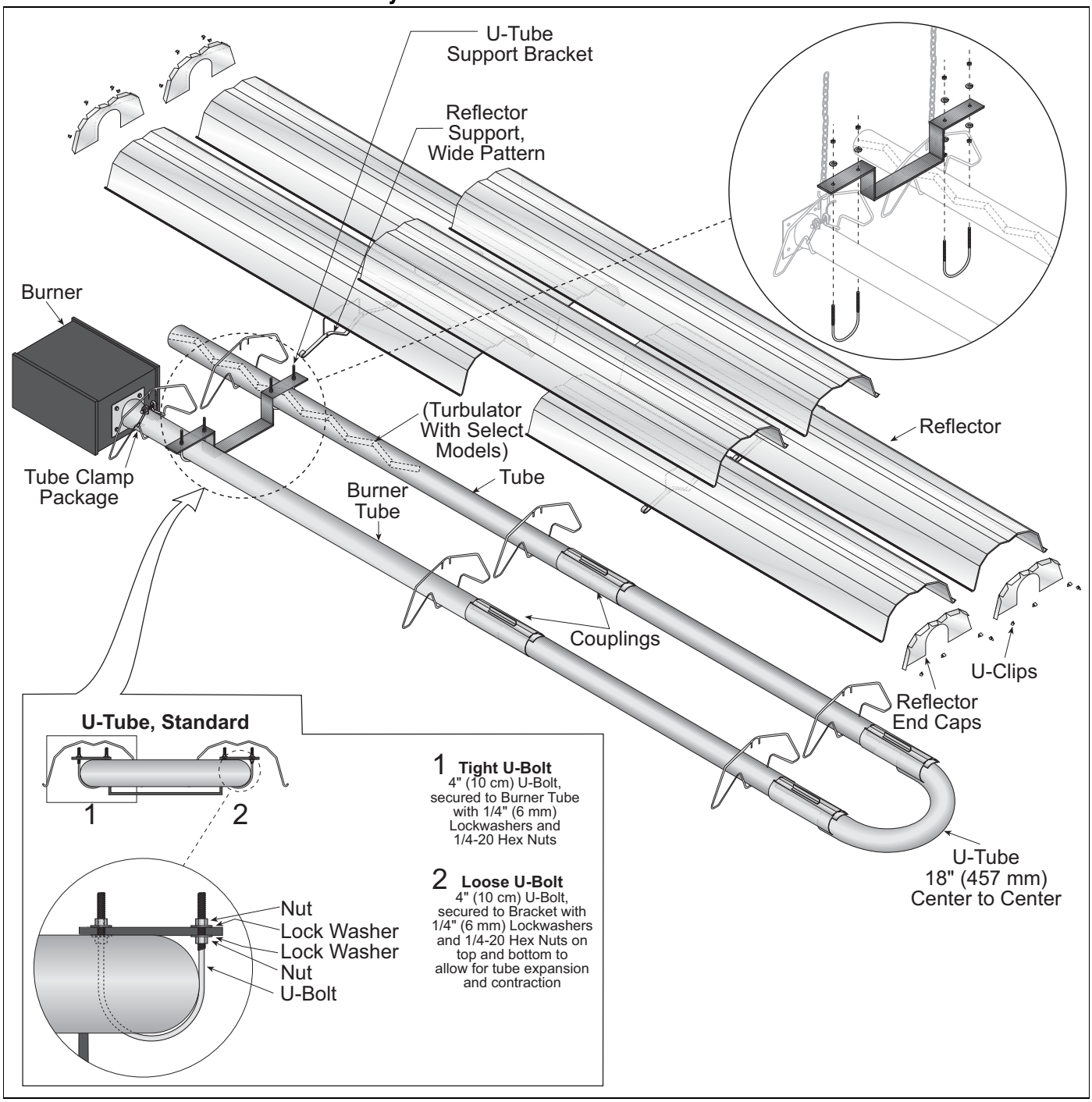

FIGURE 15: U-Tube Heater Layout Overview

LEGEND

- Burner
- Reflector
- Tube 10' (3 m)
- Tube 5' (1.5 m)**
- Tube/Reflector Hanger, Wide Pattern
- Coupling Assembly
- U-tube

a = 14" (36 cm)
reflector width (not shown)

b = 2" (5 cm)
end cap to burner

c = 2" (5 cm)
end cap to hanger

d = 7'6" (229 cm)
distance first hanger

e = 10' (305 cm)
distance between hangers

f = 5' (153 cm)
distance between last full tube hanger and half tube hanger

g = 17.5" (44 cm)
burner length

h = 9.5" (24 cm)
burner height

*Requires the last **reflector** before the u-tube to be cut in half for use on both sides.

Requires the last **tube before the u-tube to be cut in half for use on both sides.

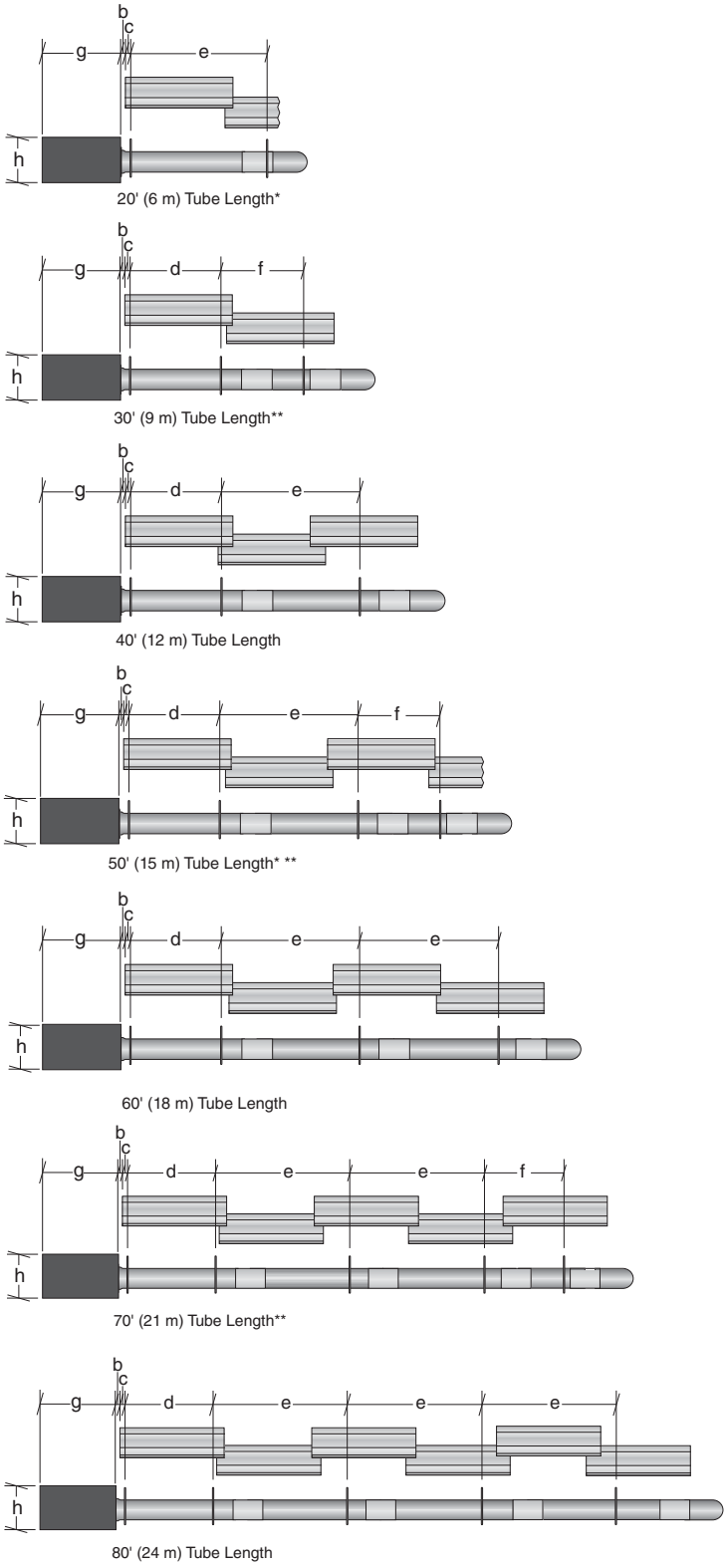

7.2 Elbow Package Configuration

Step 7.2.1 Elbow Installation

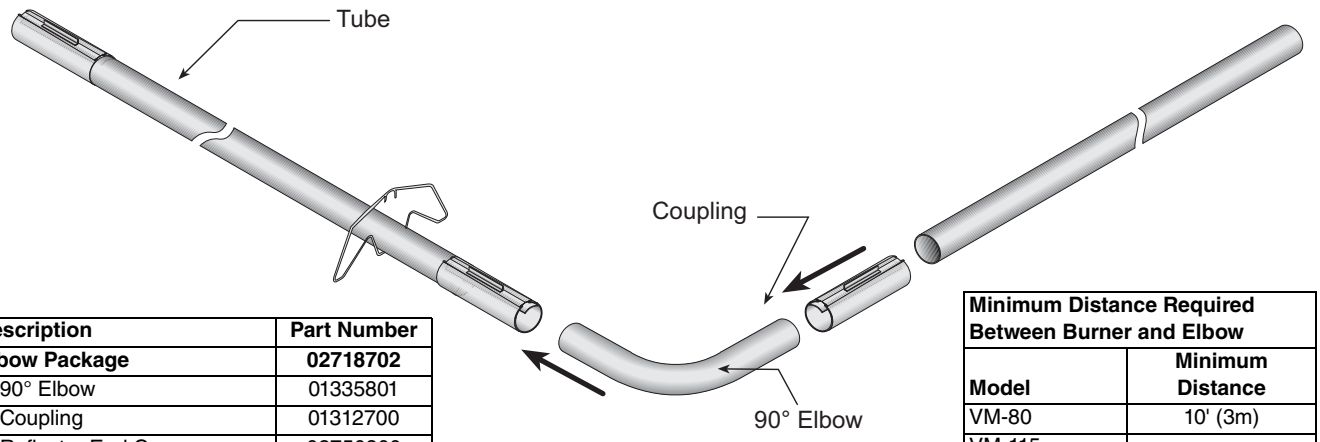

Description	Part Number
Elbow Package	**02718702**
90° Elbow	01335801
Coupling	01312700
Reflector End Cap	02750800
Reflector Joint Piece	02750900
U-clip Package	**91107720**

Minimum Distance Required Between Burner and Elbow	
Model	**Minimum Distance**
VM-80	10' (3m)
VM-115 VM-150 VM-200	15' (4.5m)

Step 7.2.2 Elbow Installation

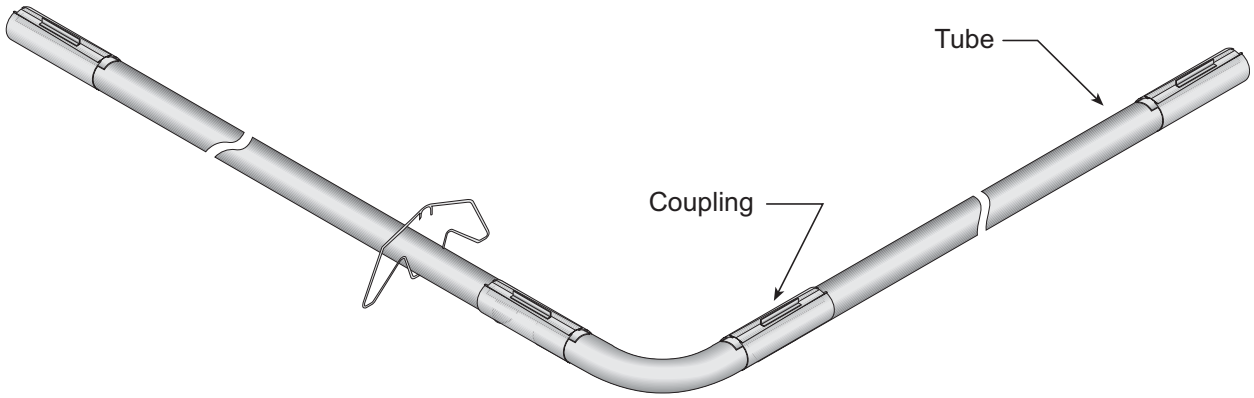

Step 7.2.3 Reflector Joint Installation

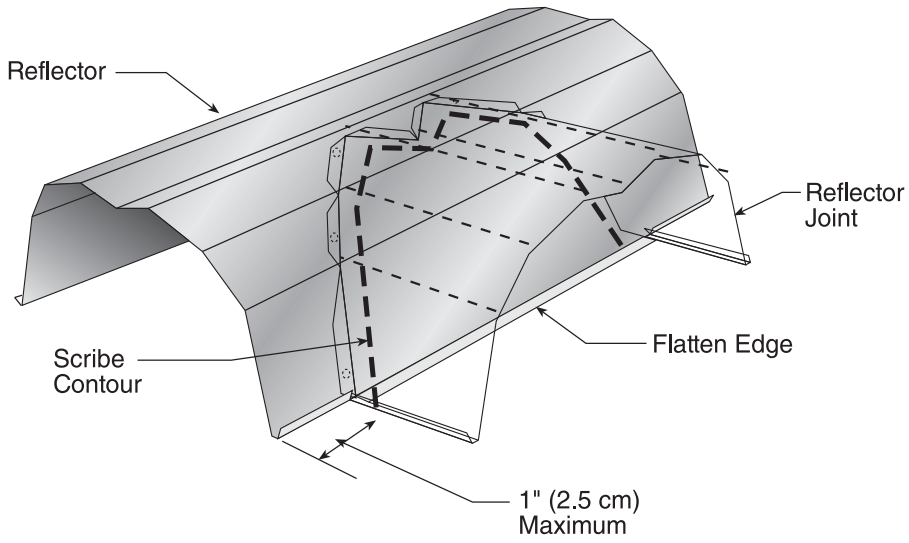

Step 7.2.4 Reflector Joint Installation

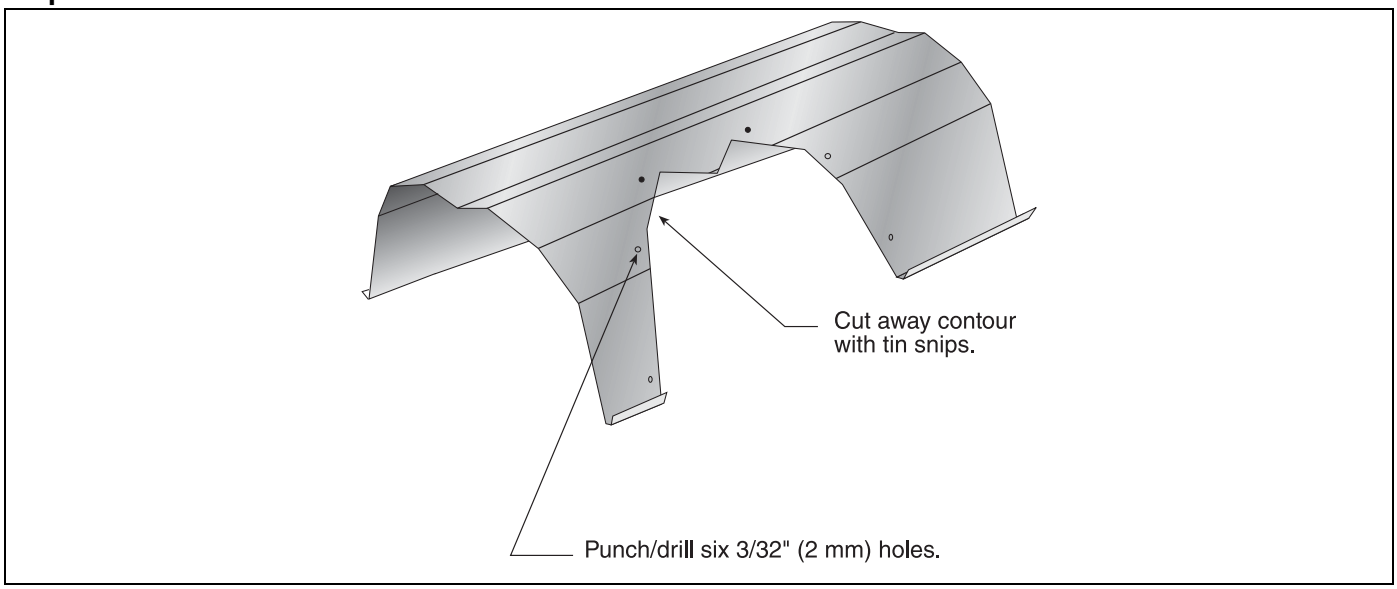

Step 7.2.5 Reflector Joint Detail

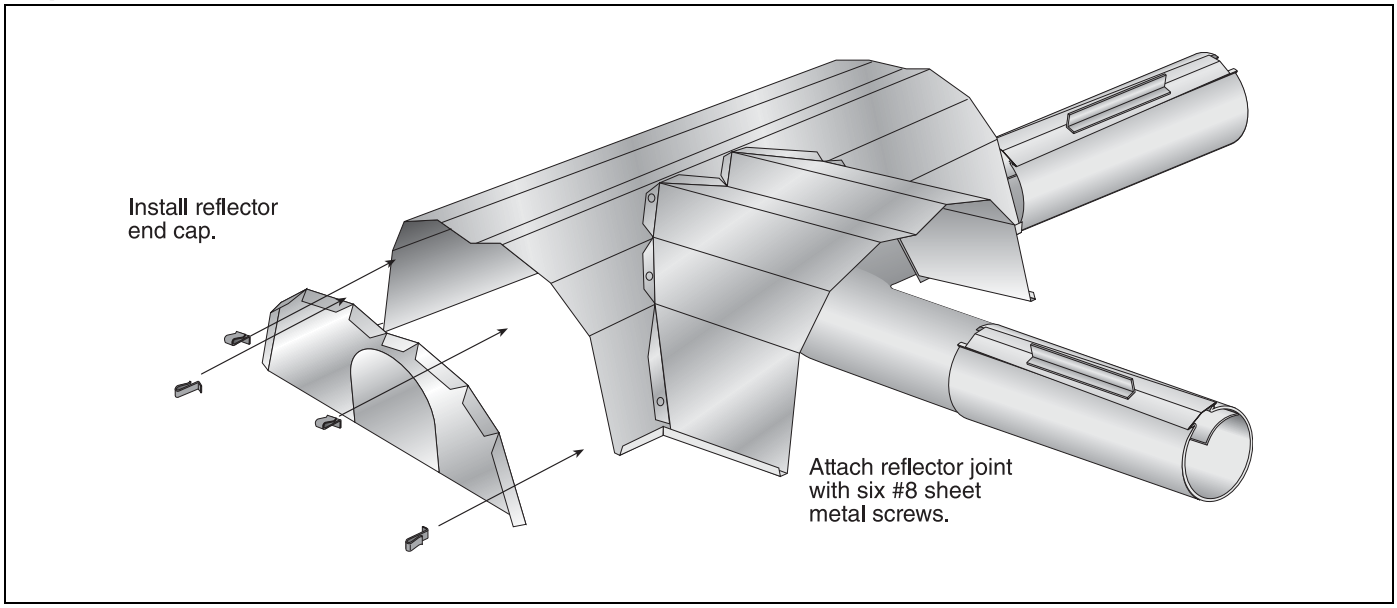

FIGURE 16: Reflector Joint Detail

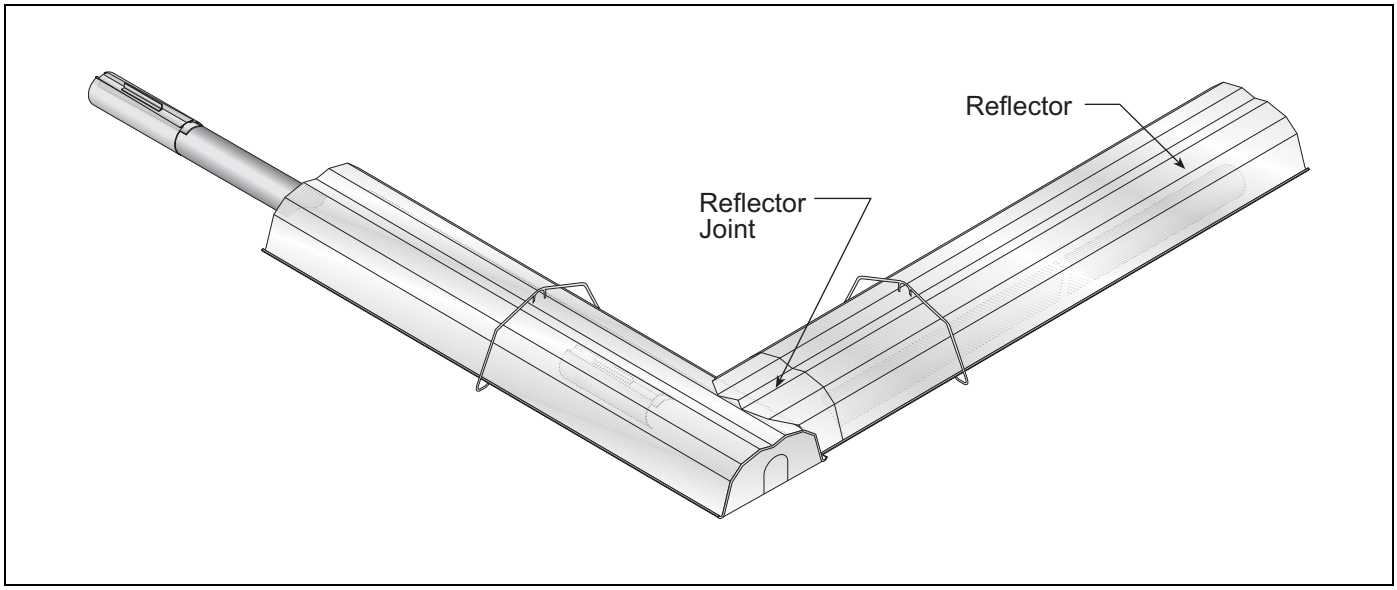

7.3 Reflector Side Extension

Step 7.3.1 Bracket Installation

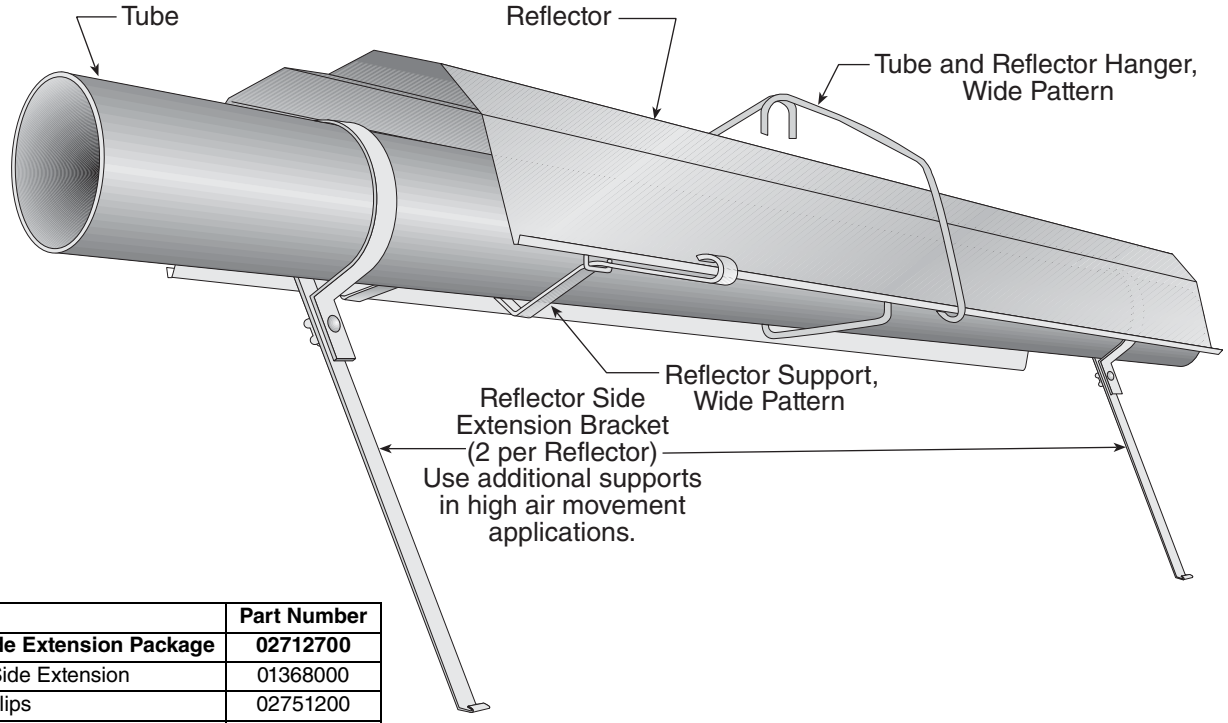

Description	Part Number
Reflector Side Extension Package	**02712700**
Reflector Side Extension	01368000
Retainer Clips	02751200
Sheet Metal Screws	94118106
Order Separately	
Reflector Side Extension	01329910

Step 7.3.2 Side Reflector Installation

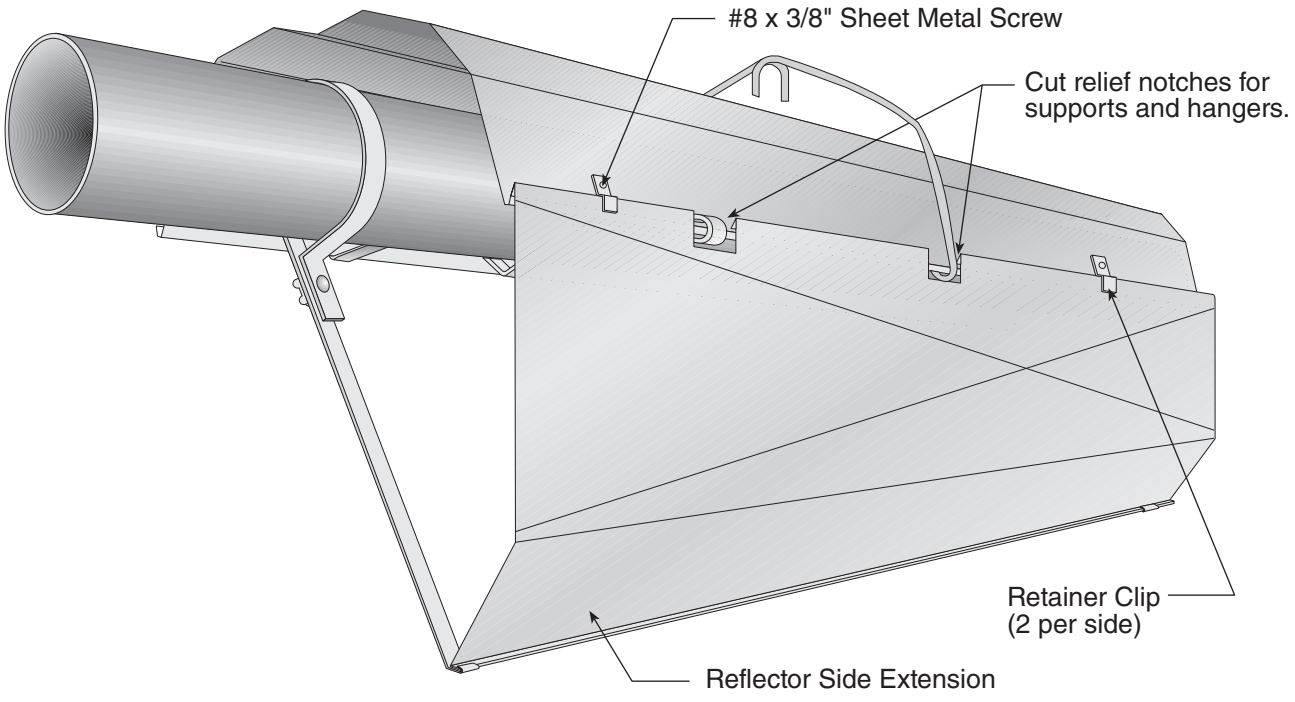

7.4 Lower Clearance Shield Installation

Step 7.4.1 Shield Support Strap Assembly

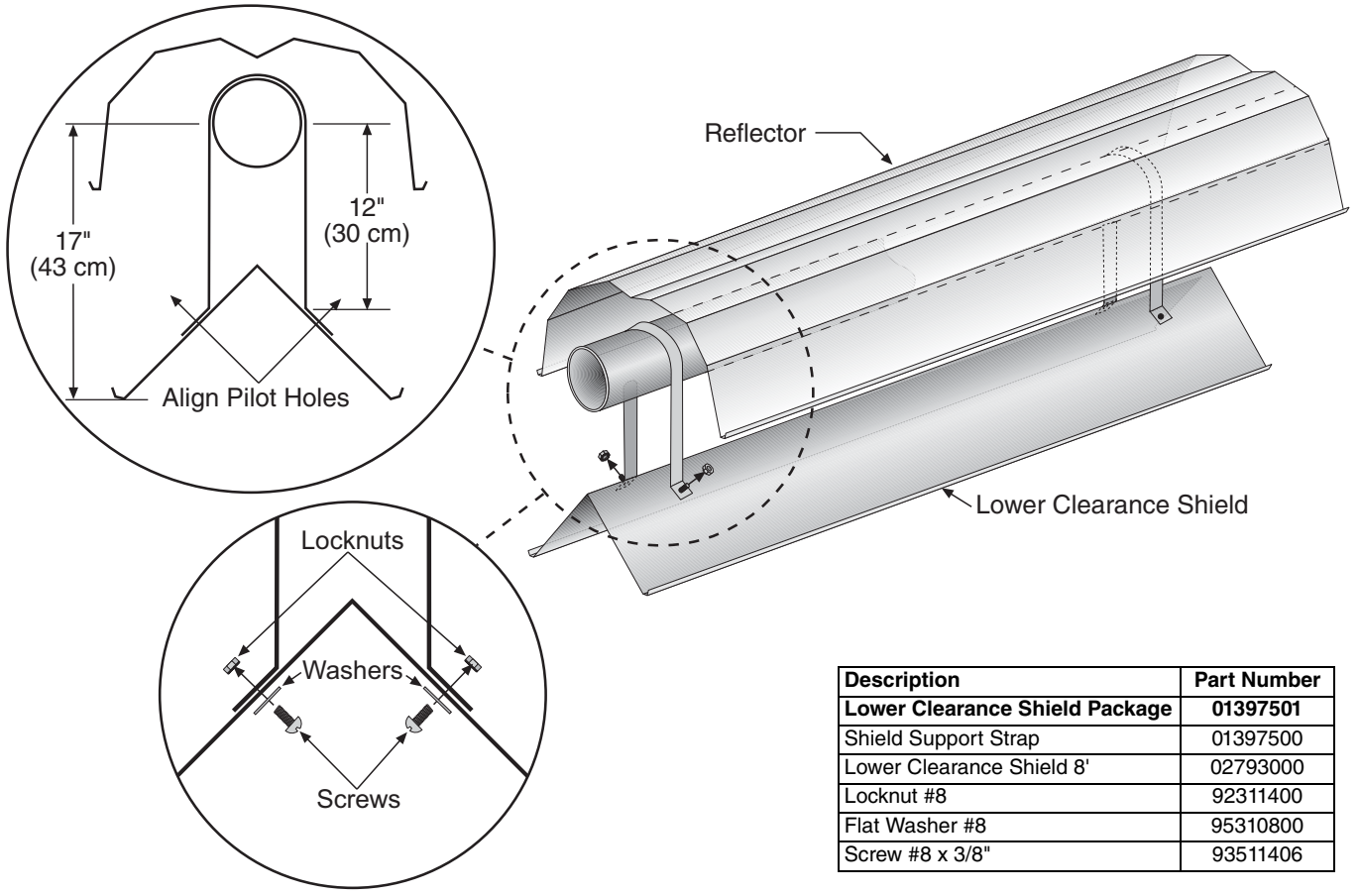

Description	Part Number
Lower Clearance Shield Package	**01397501**
Shield Support Strap	01397500
Lower Clearance Shield 8'	02793000
Locknut #8	92311400
Flat Washer #8	95310800
Screw #8 x 3/8"	93511406

7.5 Two-Foot Decorative Grille Installation

Step 7.5.1 Grille Installation

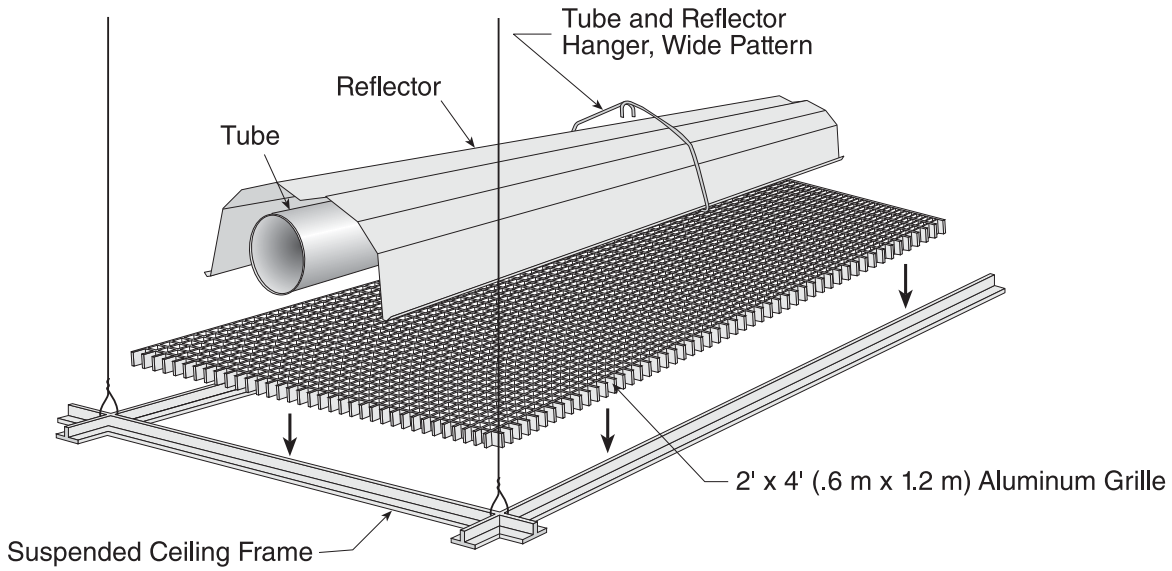

Description	Part Number
Aluminum Grille 2' x 4'	91407000

Step 7.5.2 Frame Shield Installation

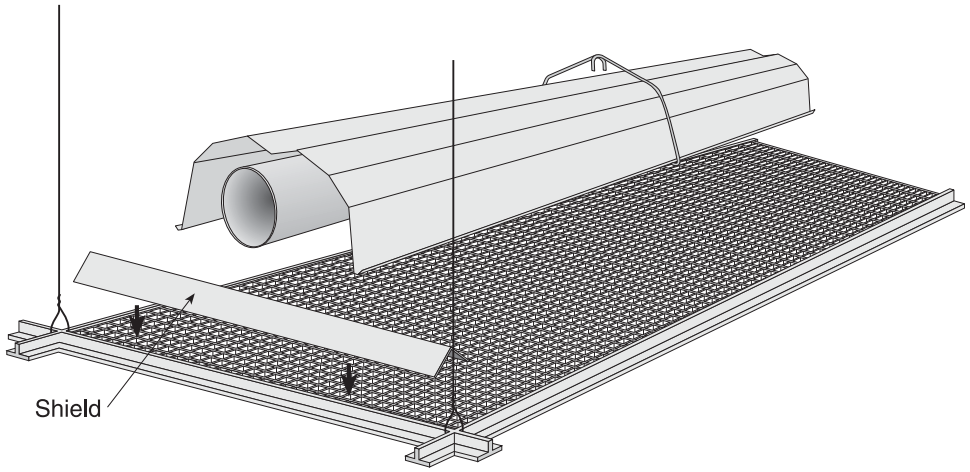

Description	Part Number
Deco Grille Shield	01365900

Step 7.5.3 Reflector Side Extension Installation for Decorative Grilles

NOTE: If the decorative grille system is to be installed in an area with considerable air movement, it is recommended that one #8 x 3/8" sheet metal screw be installed per reflector extension to prevent it from blowing over.

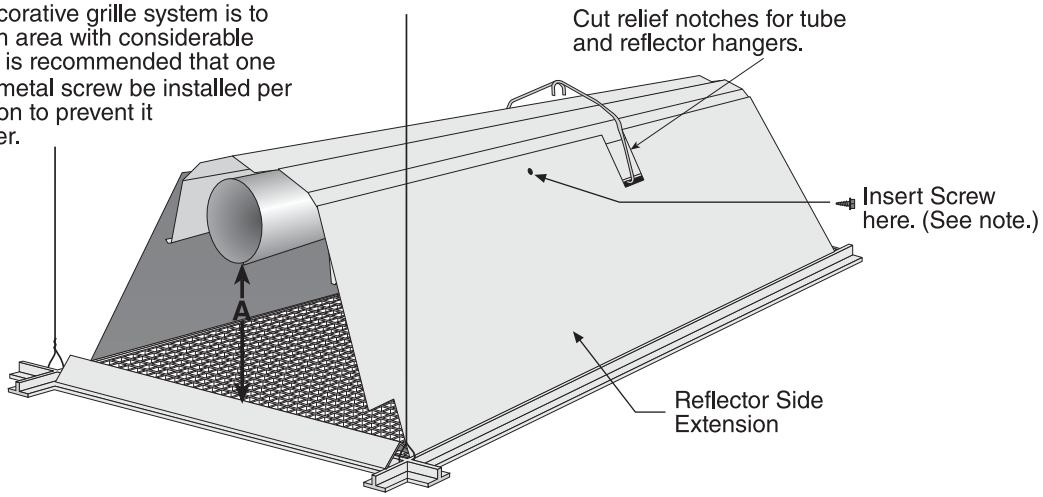

Distance "A"		Extension	
Minimum	Maximum	Part No.	Width
2" (4 cm)	6" (15 cm)	01370408	8" (20 cm)
6" (15 cm)	10" (26 cm)	01370412	12" (30 cm)
10" (26 cm)	14" (37 cm)	01370416	16" (40 cm)

Description	Part Number
Reflector Side Extension	01370412

7.6 Protective Grille Installation

Step 7.6.1 Silicone Cap Installation

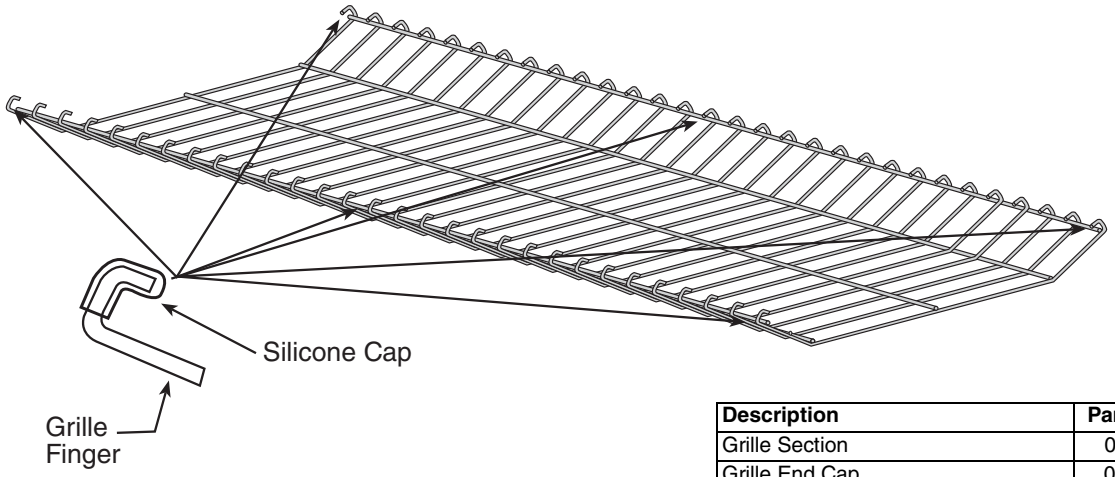

Description	Part Number
Grille Section	08050001
Grille End Cap	08050002
Silicone Cap	91915951-6P

Step 7.6.2 Grille End Cap Installation

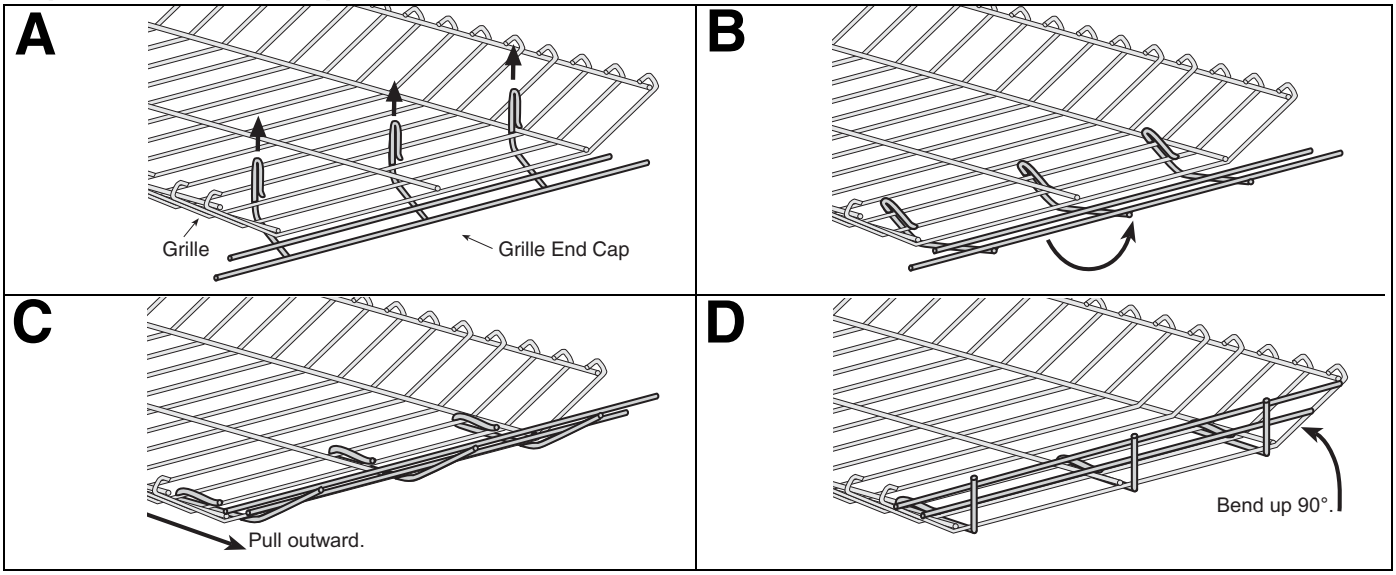

Step 7.6.3 Grille Installation

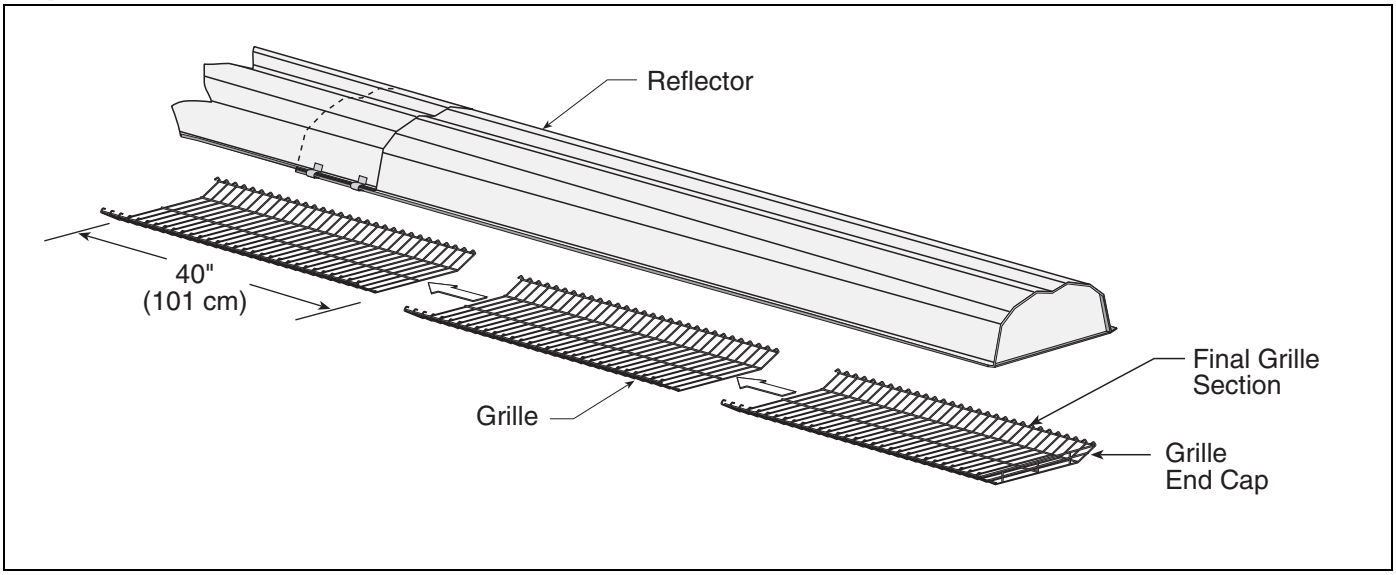

SECTION 8: VENTING

⚠WARNING

Carbon Monoxide Hazard

Heaters installed unvented must be interlocked with sufficient building exhaust.

Heaters must be installed according to the installation manual.

Failure to follow these instructions can result in death or injury.

⚠WARNING

Cut/Pinch Hazard

Wear protective gear during installation, operation and service.

Edges are sharp.

Failure to follow these instructions can result in injury.

8.1 Venting

This heater must be vented in accordance with the rules contained in this manual and with the following national codes and any state, provincial or local codes which may apply:

United States: Refer to National Fuel Gas Code NFPA 54/ANSI Z223.1 - latest revision.

Canada: Refer to Natural Gas and Propane Installation Code CSA B149.1 - latest revision.

In brooder installations, affix brooder ventilation wall tag (P/N 91039300) adjacent to the heater thermostat. In the absence of a thermostat, the wall tag must be posted in a conspicuous location.

Exhaust end of heater will accept a 4" (10 cm) vent pipe using the vent adapter (P/N 90502700). To prevent leakage of condensation, install the vent adapter with the seam on top and seal the joint using a high temperature silicone sealant.

Any portion of vent pipe passing through a combustible wall must have an approved thimble to conform with the above listed codes.

Vent pipe must be sloped downward away from the burner 1/2" (1 cm) for every 20' (6 m).

The heater may be individually vented or common vented. When venting horizontally, a maximum of two heaters can be commonly vented. *See Page 33, Section 8.9*. When venting vertically, a maximum of four heaters can be commonly vented. *See Page 34, Section 8.10*.

The heater may also be installed unvented in certain circumstances according to building ventilation codes. Refer to the above codes *and Page 31, Section 8.2* for further information. Unvented operation also requires compliance with the clearances to combustibles given *on Page 8, Figure 9*.

The bottom of the vent or air intake terminal shall not be located less than 1' (.3 m) above grade level.

The vent shall not terminate less than 7' (2.1 m) above grade where located adjacent to public walkways.

Vent terminal must be installed at a height sufficient to prevent blockage by snow and building materials protected from degradation by flue gasses.

Secure all joints with #8 x 3/8 sheet metal screws. Seal all joints with high temperature silicone sealant.

Vent terminal must be beyond any combustible overhang.

8.1.1 United States Requirements

Vent must terminate at least 3' (.9 m) above any forced air inlet located within 10' (3.1 m).

Vent must terminate at least 4' (1.2 m) below, 4' (1.2 m) horizontally from, or 1' (.3 m) above any door, operable window, or gravity air inlet into any building.

8.1.2 Canadian Requirements

The vent shall not terminate within 6' (1.8 m) of a mechanical air supply inlet to any building.

The vent shall not terminate within 3' (.9 m) of a window or door that can be opened in any building, any non-mechanical air supply inlet to any building, or of the combustion air inlet of any other appliance.

8.2 Unvented Operation

Sufficient ventilation must be provided in the amount of 4 cfm per 1000 Btu/h firing rate (United States); 3 cfm per 1000 Btu/h firing rate (Canada).

Use of optional outside combustion air is not recommended with unvented heaters.

If exhaust fans are used to supply ventilation air, an interlock switch must be used to prevent the heater from coming on when the fans are off. This may be done using a pressure switch.

8.3 Horizontal Venting

In noncombustible walls only, vent terminal (P/N 02537801-1P) may be used.

For 4" (10 cm) vents in either combustible or noncombustible walls, use Tjernlund VH1-4 (P/N 90502100) or equivalent, insulated vent terminal. Follow the manufacturer's instructions for proper installation.

For 6" (15 cm) common vents in either combustible or noncombustible walls, use Tjernlund VH1-6 (P/N 90502101) or equivalent, insulated vent terminal. Follow the manufacturer's instructions for proper installation.

8.4 Vertical Venting

For 4" (10 cm), an approved vent cap (P/N 90502300) must be used.
For 6" (15 cm) common vent, an approved vent cap (P/N 90502302) must be used.
For common vertical venting of more than two heaters, *See Page 34, Section 8.10*.
A vent shall not extend less than 2' (.6m) above the highest point where it passes through a flat roof of a building.

8.5 Unvented Operation Tube Termination

Turndown type vent terminal with a screen must be installed at the exhaust end of the tube. Vent terminal design shall not incorporate backdraft flap.

FIGURE 17: Tube Termination

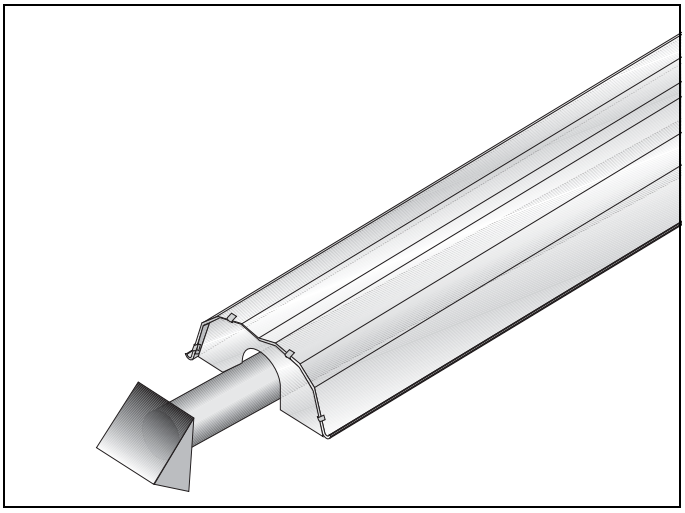

8.6 Length Requirements

The maximum vent length allowed is 45' (13.7 m). The maximum outside air supply duct length allowed is 45' (13.7 m).

The total vent length, plus outside air duct length and any extensions to minimum heat exchanger lengths, cannot exceed 65' (19.8 m).

Vent length should be limited to less than 20' (6 m). If using extended heater lengths or vent lengths greater than 20' (6 m), condensation will form in the vent pipe. Insulation and additional sealing measures (high temperature silicone at all seams) are required. Optional heat exchanger beyond minimum lengths are considered as vent length for length determination.

Subtract 15' (4.6 m) of maximum allowed vent or duct length per vent elbow if more than two are used.

8.7 Horizontal Ventilation 4" (10 cm) Pipe

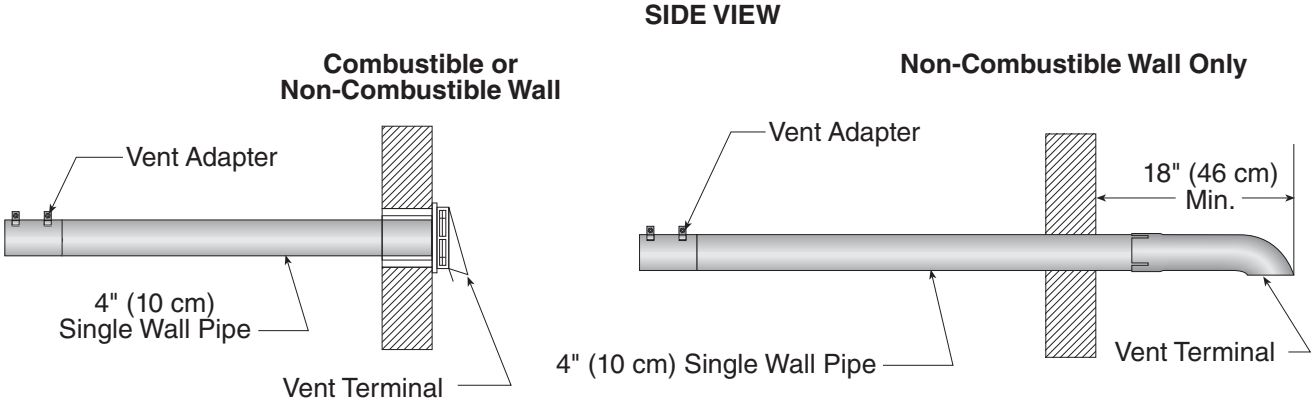

Description	Part Number
Vent Terminal (Comb. Wall)	90502100
Vent Terminal	02537801-XX

8.8 Vertical Ventilation 4" (10 cm) Pipe

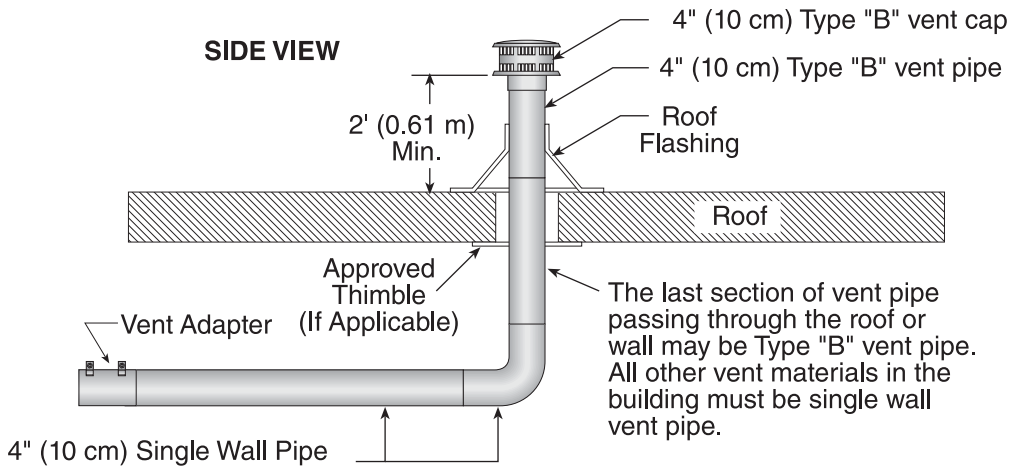

Description	Part Number
Vent Cap 4" (10 cm)	90502300

8.9 Common Side Wall Venting

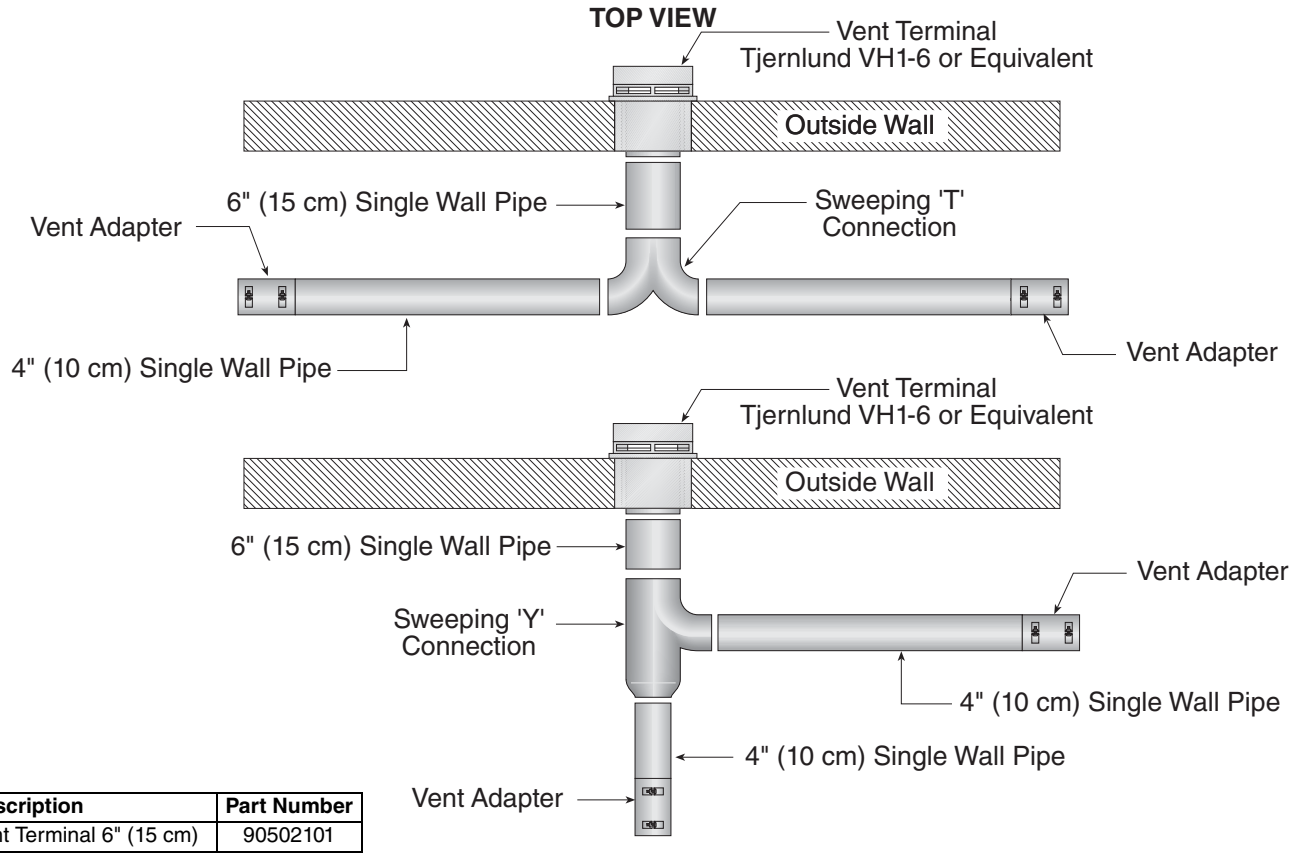

Description	Part Number
Vent Terminal 6" (15 cm)	90502101

Requirements:

- Maximum of two heaters can be commonly vented through a side wall.
- Heaters must be of the same BTU output.
- Heaters must be controlled by a common thermostat.

8.10 Common Vertical Venting

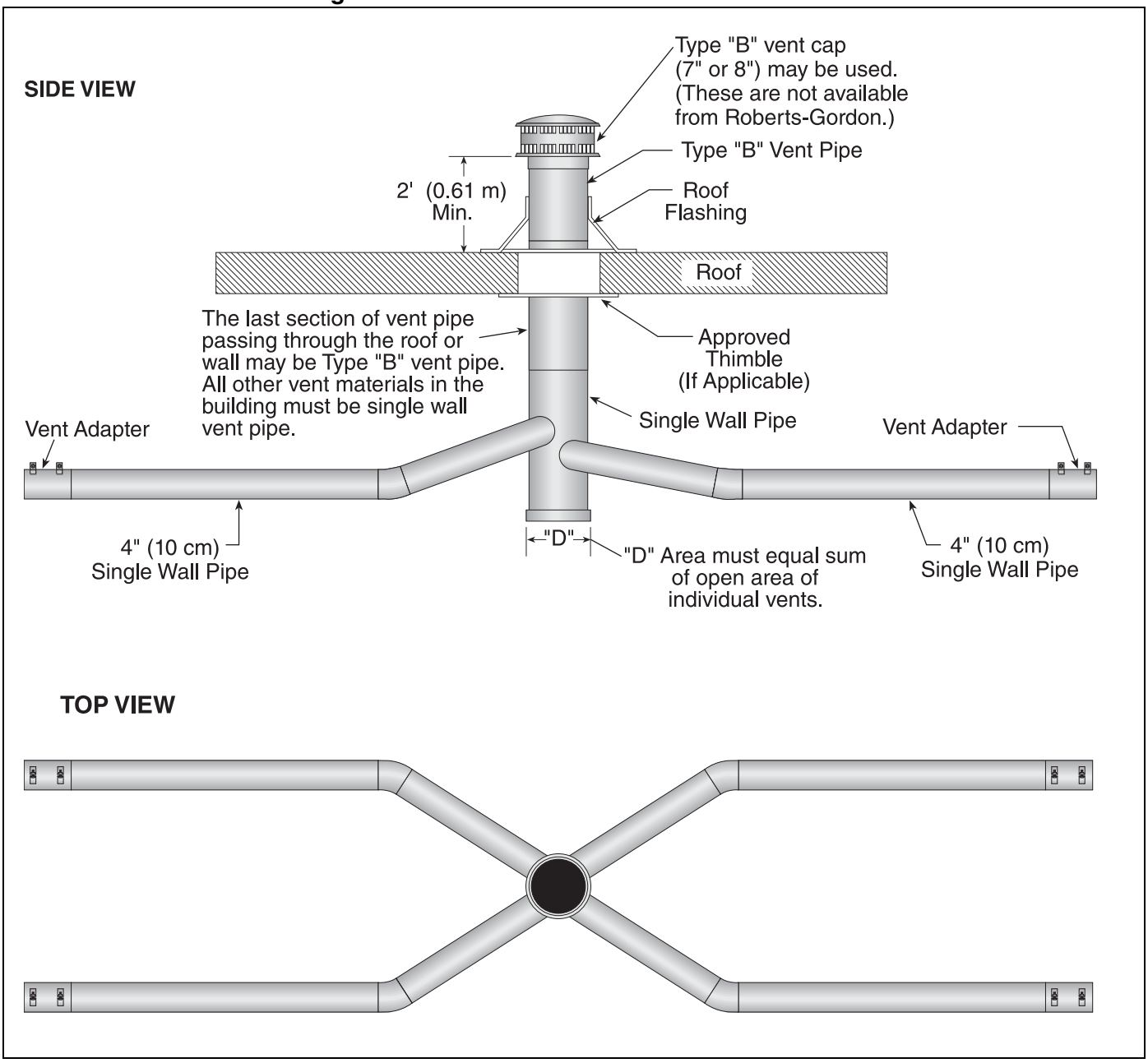

Requirements:

- Maximum of four heaters can be commonly vented through the roof.
- Heaters must be of the same BTU output.
- Heaters must be controlled by a common thermostat.
- Connections to a common stack must be positioned to avoid direct opposition between streams of combustion gases.

8.11 Outside Combustion Air Supply

IMPORTANT: If the building has a slight negative pressure or corrosive contaminants such as halogenated hydrocarbons are present in the air, an outside combustion air supply to the heater is required. Seal all combustion air pipe joints.

The air supply duct may have to be insulated to prevent condensation on the outer surface. The outside air terminal must not be more than 1' (31 cm) above the vent terminal.

Use of optional outside combustion air is not recommended with unvented heaters.

8.11.1 Length Requirements

Follow the constraints listed *on Page 32, Section 8.6*.

8.11.2 Vertical Outside Air Supply for Single Heater Installation

SIDE VIEW

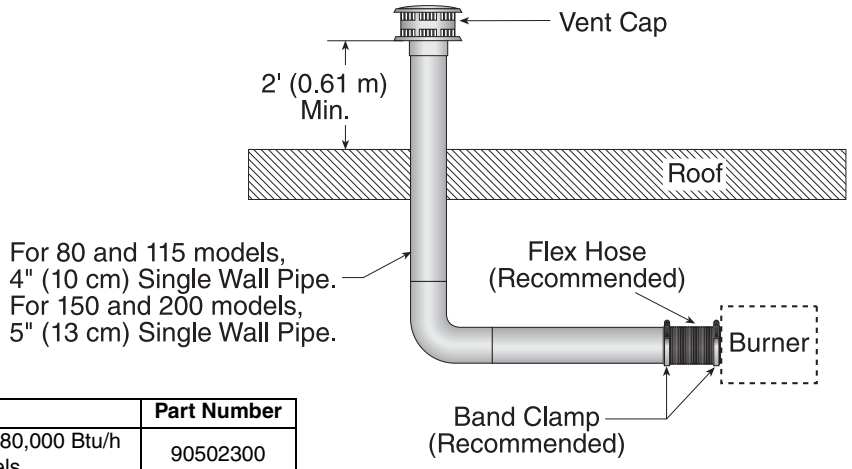

Description	Part Number
Vent Cap 4" (10 cm) for 80,000 Btu/h and 115,000 Btu/h models	90502300
Vent Cap 5" (13 cm) for 150,000 Btu/h and 200,000 Btu/h models	90502301

8.11.3 Horizontal Outside Air Supply for Single Heater Installation

SIDE VIEW

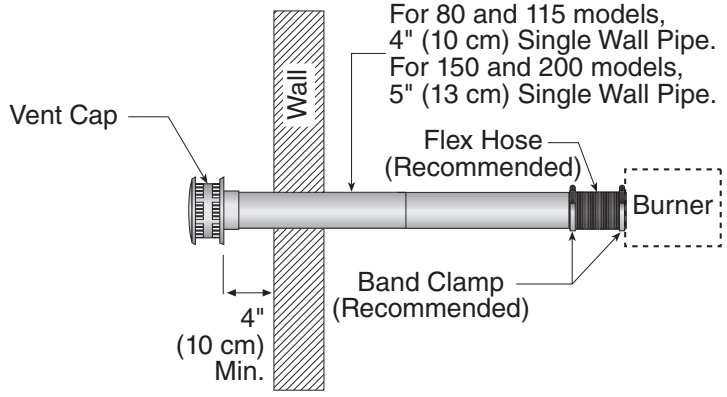

Description	Part Number
Vent Cap 4" (10 cm) for 80,000 Btu/h and 115,000 Btu/h models	90502300
Vent Cap 5" (13 cm) for 150,000 Btu/h and 200,000 Btu/h models	90502301

8.11.4 Vertical Outside Air Supply for Double Heater Installation

SIDE VIEW

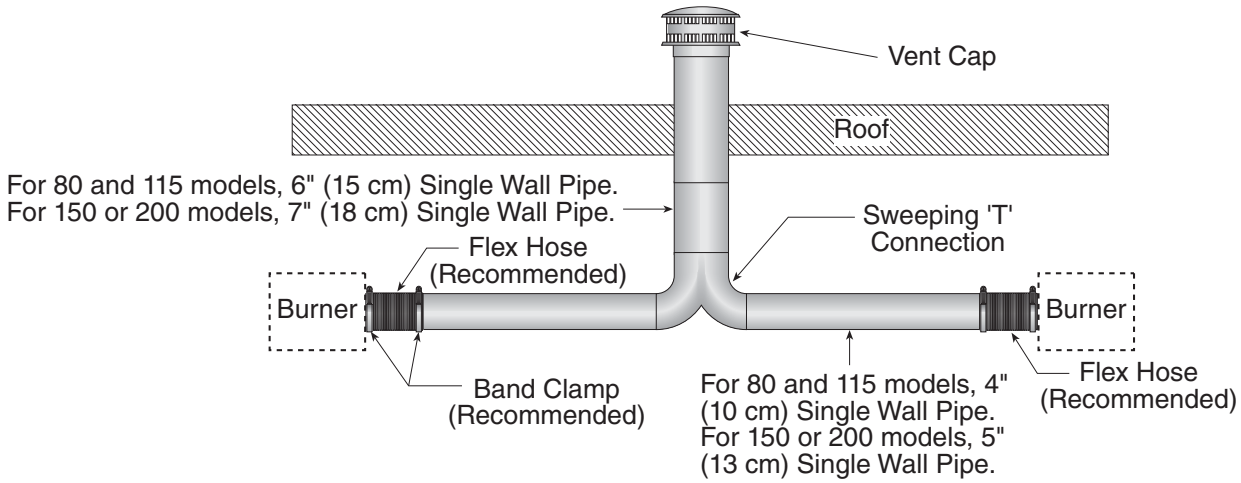

Description	Part Number
Vent Cap 6" (15 cm)	90502302

Requirements:

- Heaters must be controlled by a common thermostat.

8.11.5 Horizontal Outside Air Supply for Double Heater Installation

TOP VIEW

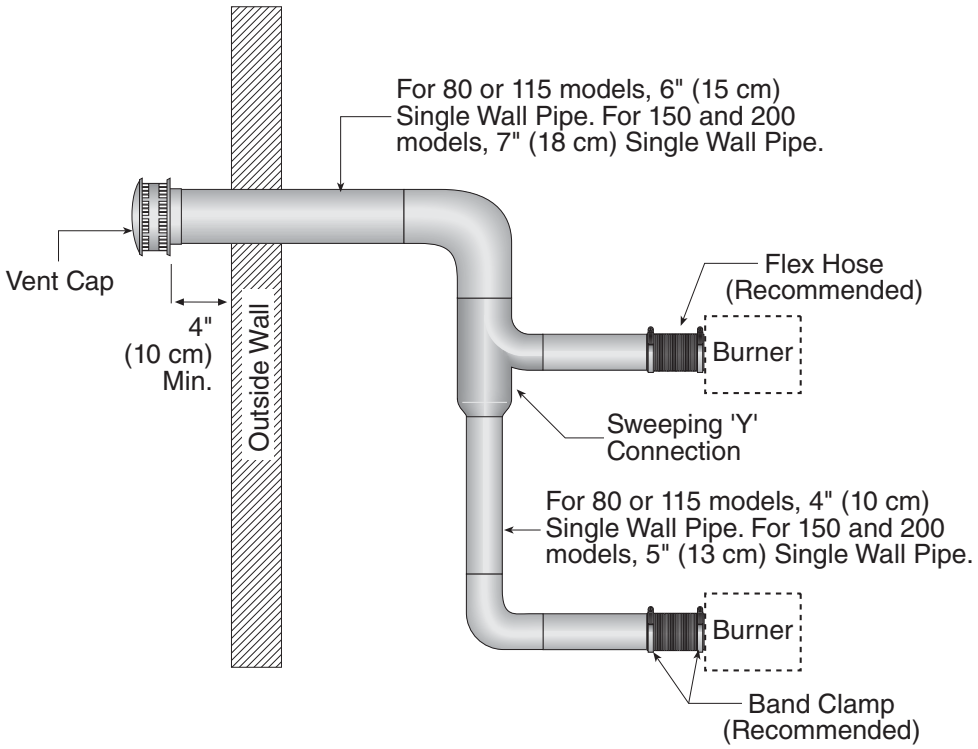

Description	Part Number
Vent Cap 6" (15 cm)	90502302

Requirements:

- Heaters must be controlled by a common thermostat.

SECTION 9: GAS PIPING

⚠ WARNING

Fire Hazard

Tighten gas hose fittings to connect gas supply according to Figure 21.

Gas hose can crack when twisted.

Gas hose moves during normal operation.

Use only 36" (91 cm) long connector of 1/2" or 3/4" nominal ID.

Connector supplied with heater for U.S. models (not with Canadian models).

Failure to follow these instructions can result in death, injury or property damage.

⚠ WARNING

Explosion Hazard

Leak test all components of gas piping before operation.

Gas can leak if piping is not installed properly.

Do not high pressure test gas piping with heater connected.

Failure to follow these instructions can result in death, injury or property damage.

Install the gas hose as shown in *Figure 18*. The gas hose accommodates expansion of the heating system and allows for easy installation and service of the burner. Before connecting the burners to the supply system, verify that all high pressure testing of the gas piping has been completed.

There is an expansion of the tube with each firing cycle. This will cause the burner to move with respect to the gas line. This can cause a gas leak resulting in an unsafe condition if the gas connection is not made in strict accordance with *Figure 18*.

Meter and service must be large enough to handle all the burners being installed plus any other connected load. The gas line which feeds the system must be large enough to supply the required gas with a maximum pressure drop of 1/2" wc When gas piping is not included in the layout drawing, the local gas supplier will usually help in planning the gas piping.

Gas lines must meet applicable codes:
United States: The Flexible Stainless Steel Gas Hose (US models) supplied with the heater is certified per the Standard for Connectors for Gas Appliances, ANSI Z21.24/CSA 6.10 - latest revision.
Canada: The Rubber Type 1 Gas Hose (Canadian models) optional with the heater is certified as being in compliance with the Standard for Elastomeric Composite Hose and Hose Couplings for Conducting Propane and Natural Gas, CAN/CGA 8.1 - Latest revision.

- **Check the pipe and tubing ends for leaks before placing heating equipment into service. When checking for gas leaks, use a soap and water solution; never use an open flame.**

FIGURE 18: Gas Connection with Flexible Gas Hose

CORRECT POSITIONS

⚠ CAUTION

Product Damage Hazard

Hold gas nipple securely with pipe wrench when attaching gas hose.

Failure to follow these instructions can result in product damage.

Shut-Off Valve (included with gas hose) must be parallel to burner gas inlet. The 3" (8 cm) displacement shown is for the cold condition. This displacement may reduce when the system is fired.

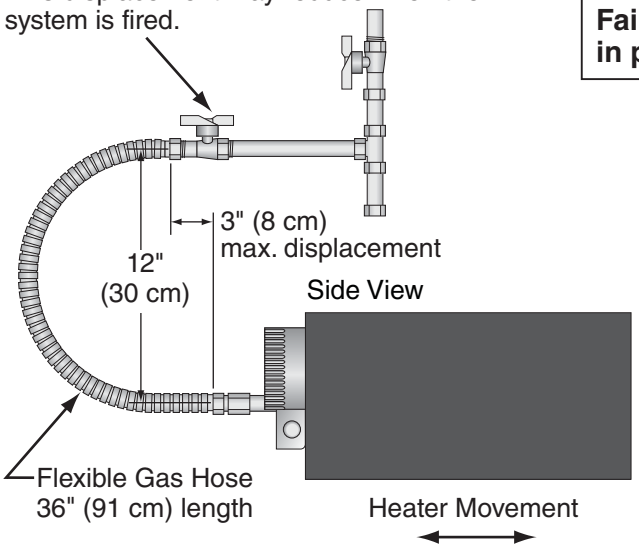

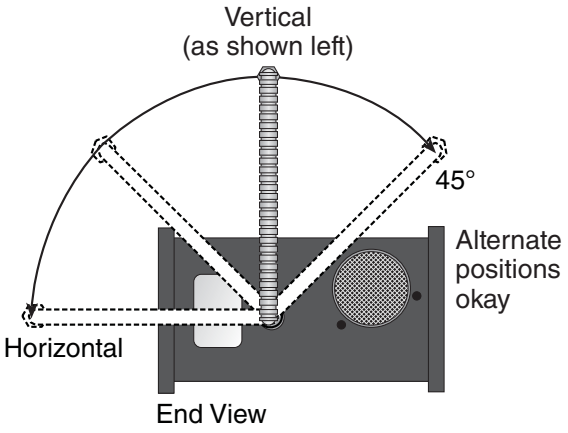

INCORRECT POSITIONS (WRONG INSTALLATION)

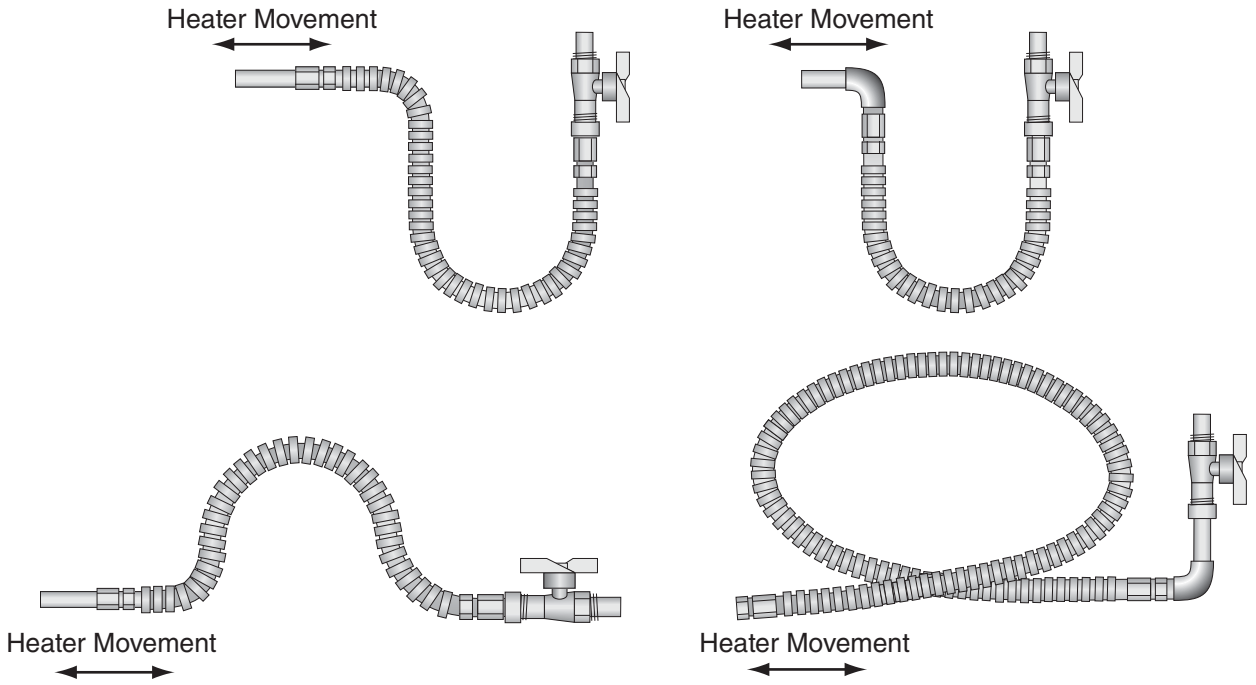

Description	Part Number
1/2" Flexible Stainless Steel Gas Hose (US Models)	91412200
3/4" Flexible Stainless Steel Gas Hose (US Models)	91412204
1/2" Rubber Type 1 Gas Hose (Canadian Models)	91412206
3/4" Rubber Type 1 Gas Hose (Canadian Models)	91412207

SECTION 10: WIRING

⚠ DANGER

Electrical Shock Hazard

Disconnect electric before service.

Heater must be properly grounded.

Failure to follow these instructions can result in death or electrical shock.

Heater must be grounded in accordance with applicable codes: United States: refer to National Electrical Code® NFPA 70 - latest revision Canada: refer to Canadian Electrical Code, CSA C22.1 Part I - latest revision.

If any of the original internal wiring must be replaced, it must be replaced with wiring materials having a temperature rating of at least 105°C and 600 Volts.

10.1 Heater Wiring for use with Brooder Contoller

The heater will automatically modulate when connected to an output relay on a brooder controller.

10.1.1 Line Voltage Power Wiring

All burners are powered by a circuit(s) separate from the brooder controller outputs. The burners must have an uninterrupted 120 V, 60 Hz, 1 Ø power supply.

FIGURE 19: Line Voltage Power Wiring

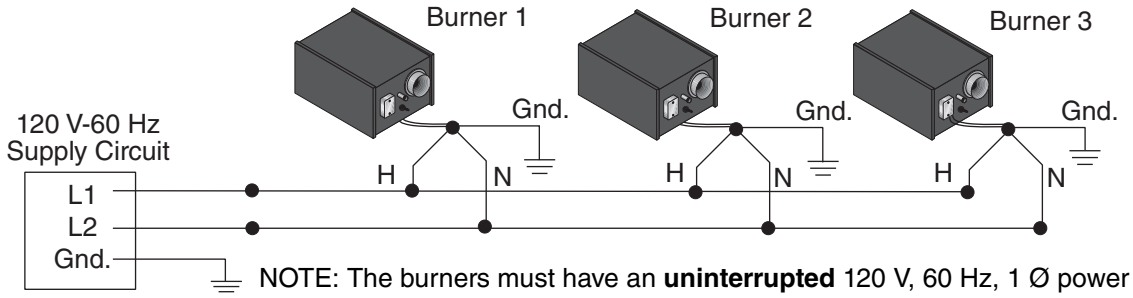

NOTE: The burners must have an **uninterrupted** 120 V, 60 Hz, 1 Ø power supply. All burners are powered by a circuit(s) seperate from the brooder controller outputs.

10.1.2 Brooder Control Wiring

The heater outputs on the brooder controller will act as the ON/OFF switch in the control circuit. The R and W terminals (T24 and T25) on the heater control board are wired to the heater output terminal on the brooder controller. If the brooder controller outputs provide line voltage output, a contactor must be installed between the brooder controller and the heater R and W terminals (T24 and T25). Power must not be supplied to the "thermostat" (R and W) circuit. The brooder controller must only provide the opening and closing (dry contact) of the "thermostat" (R and W) circuit. The heater that is wired to the brooder output terminals will be designated as a "central" heater. If there are multiple heaters in a heating zone, the control wiring for all of the other heaters in the zone will be wired in series (daisy-chain) from the "central" heater's "firing rate out" terminals (T30 and T31). See Figure 2. The jumpers on the J10 pin block on the heater control board must set by the installer as shown in Figure 2. The "central" heater will have both jumpers on the J10 pin block on the right-most pins as shown if Figure 2.

The satellite heaters will have the J10 pin jumpers set on the left-most pins.

10.1.3 Operation

During the heater operation, the heater will automatically modulate based on the brooder controller's ON/OFF output timing and history using an algorithm programmed into the heater's control board. The "central" heater will determine the appropriate heater burn rate and any satellite heaters will modulate to the same burn rate based on the central heater's commands.

NOTE: During the cycling of the heaters, the heaters may still be operating even though the brooder controller may not be calling for heat. This is normal operation of the modulating heater. After satisfying the required temperature, the heater will continue to run at a lower burn rate to maintain the temperature as close to the temperature setpoint as possible.

The heater will completely turn off once it modulates the burn rate to the lowest setting.

FIGURE 20: Low Voltage Brooder Control Wiring

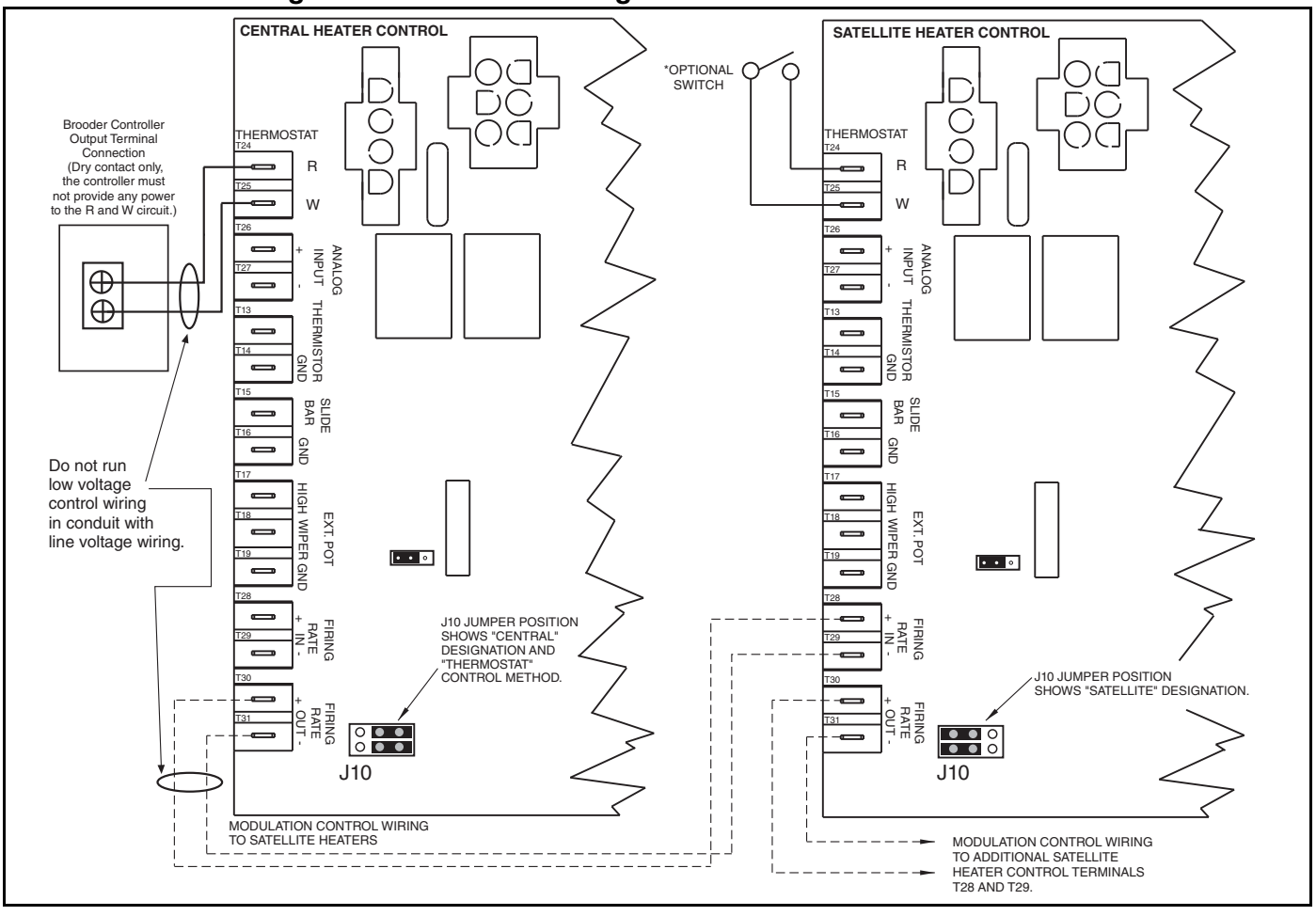

10.2 Standard Heater Configuration

From the factory, the heater is configured for zone sensor control. Connect zone sensor to the heater control as shown *on Page 41, Figure 21*.
If additional heaters are in the same heating zone, control wiring must be installed between the heaters' controls as shown *on Page 41, Figure 21*.
For additional details or for use with heat demand control devices other than the zone sensor, *see Page 42, Section 10.3 through Page 50, Section 10.5.9*.

FIGURE 21: Zone Sensor Wiring Diagram

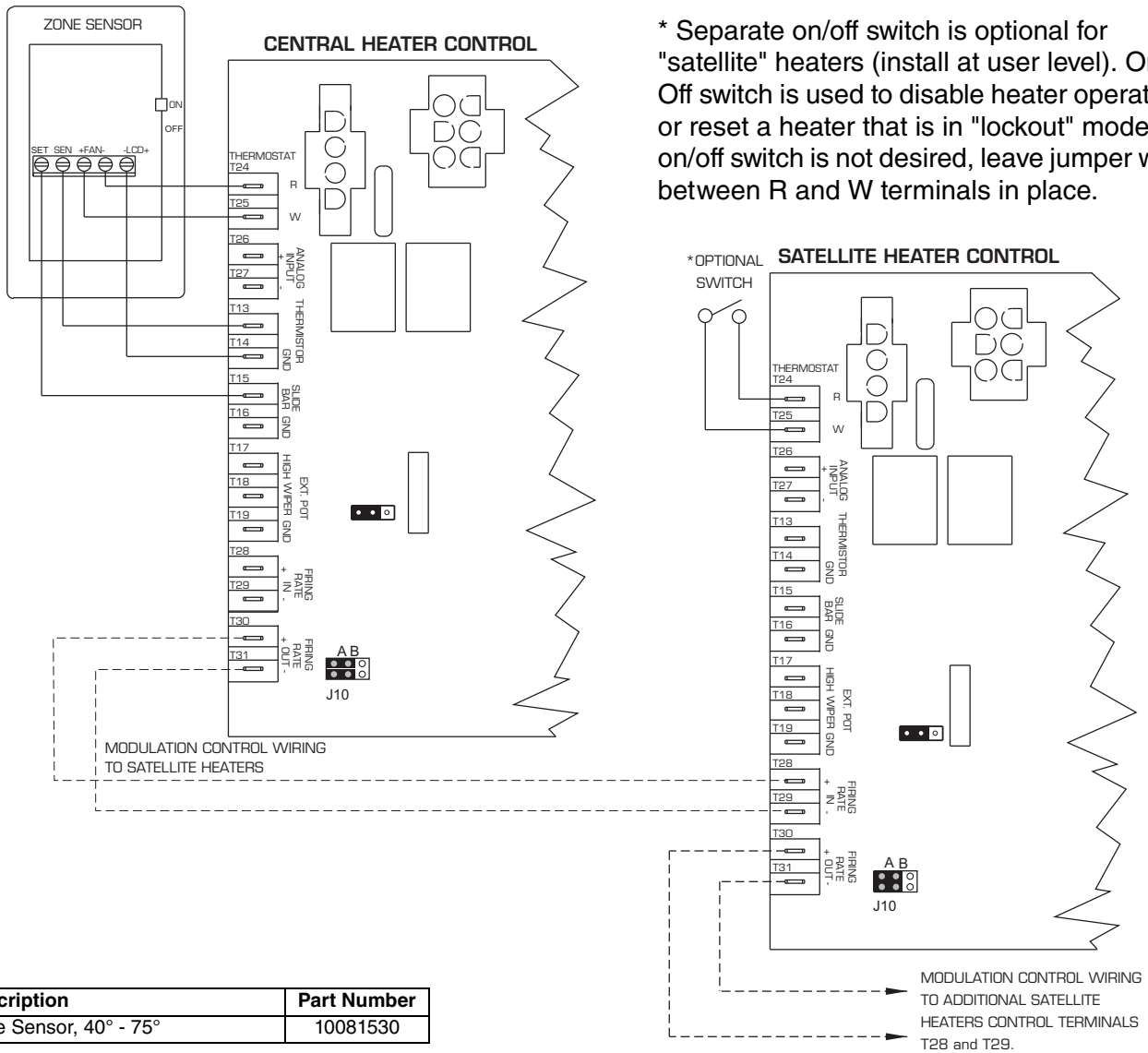

Description	Part Number
Zone Sensor, 40° - 75°	10081530

10.3 Central and Satellite Heaters (Zoning Capability)

The heater can be configured so that several heaters within the same heating zone will modulate simultaneously with connection to a single heat demand control device. The heat demand control device (*See Page 46, Section 10.5*) will be wired directly to a single heater configured as the central heater. The remaining heaters in the zone will be configured as satellite heaters and will modulate based on control signaling from the central heater. Zoning capability allows any CTH3-Series heater (regardless of input) to modulate based on the signal from the central heater. During modulation, each satellite heater will operate at the same percentage of full rated input as the central heater.

10.3.1 Central Heater Configuration

Central heater configuration is set by positioning of jumpers on pin blocks (J10 and J9) located on the control inside the heater compartment, *See Page 42, Figure 22*. Jumper position on J10 shown in *Figure 22*, will configure heater as a central heater and at the same time configure the heater for the desired heat demand device (zone sensor, thermostat, analog input, or 10K Ohm pot.). If jumpers on J10 are positioned for "analog", jumper on J9 must be positioned for either 0-10 Vdc or 4-20 mA. If jumpers on J10 are not positioned for "analog", the J9 jumper may be left alone.

FIGURE 22: Central Heater Jumper Settings

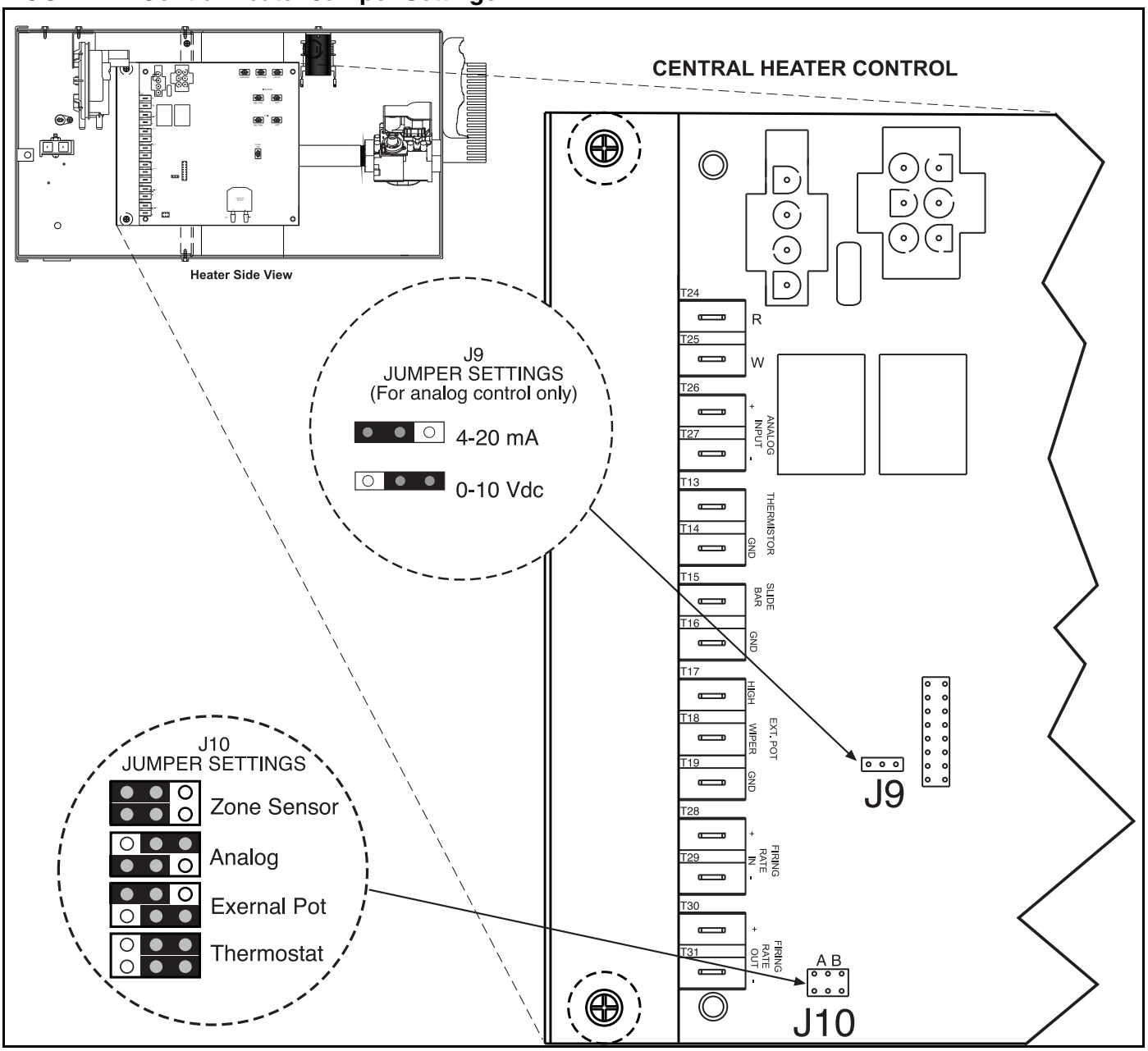

10.3.2 Satellite Heater Configuration

Satellite heater configuration is set by positioning of jumpers on pin block J10 located on the control board inside the heater compartment, *See Page 43, Figure 23*. Jumper position on J10, shown *on Page 43, Figure 23* will configure heater as a satellite heater. (The jumper position for satellite is the same as the jumper position of a central heater using a zone sensor). Jumper on J9 may be left alone.

FIGURE 23: Satellite Heater Jumper Setting

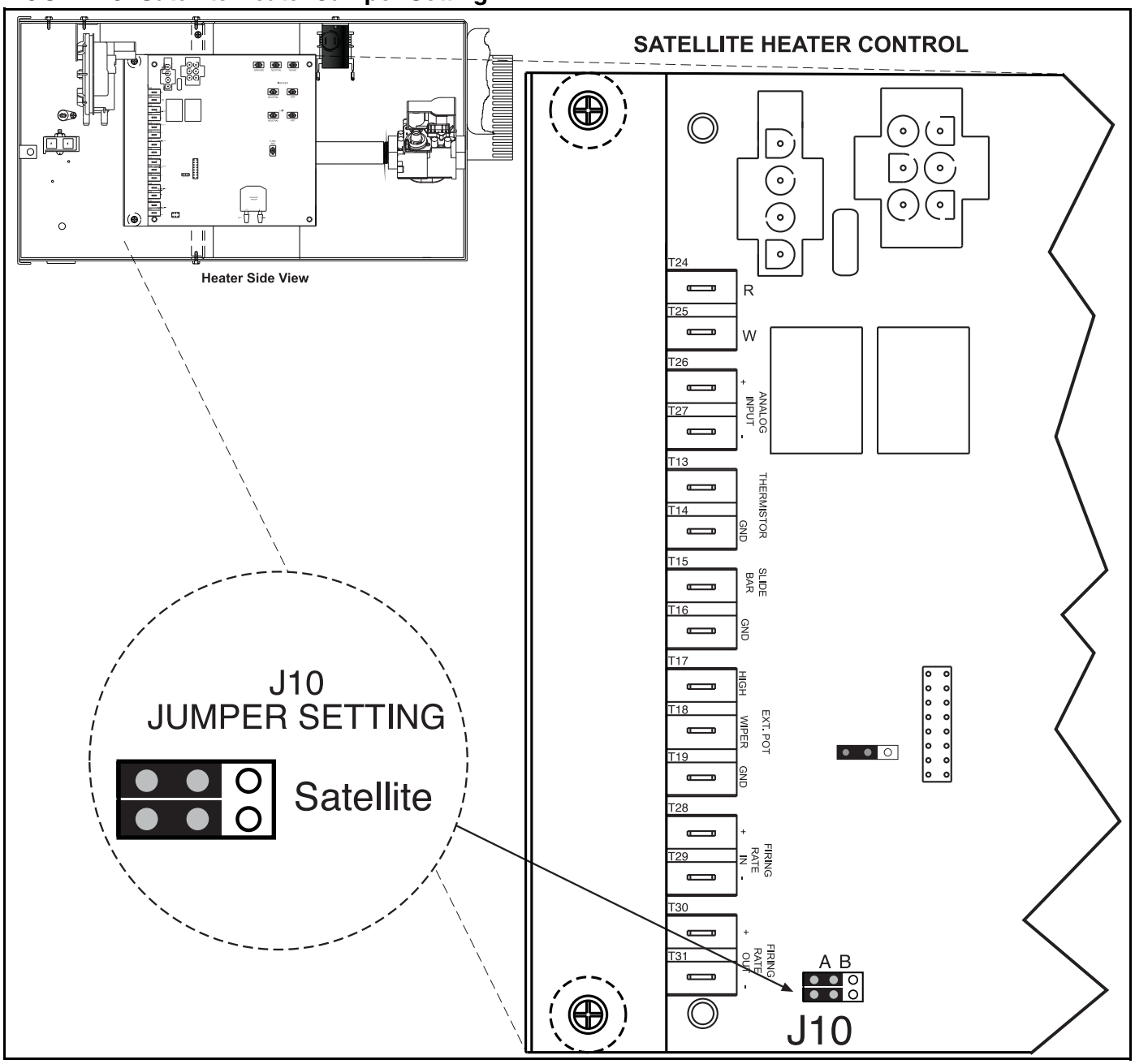

10.4 Communication Wiring within a Zone of Heaters

Satellite heaters will be wired in series to the central heater via low voltage control wiring.

Communication wiring uses the T28-T31 terminals on the control, see *Page 44, Figure 24*.

FIGURE 24: Communication Wiring within a Zone of Heaters

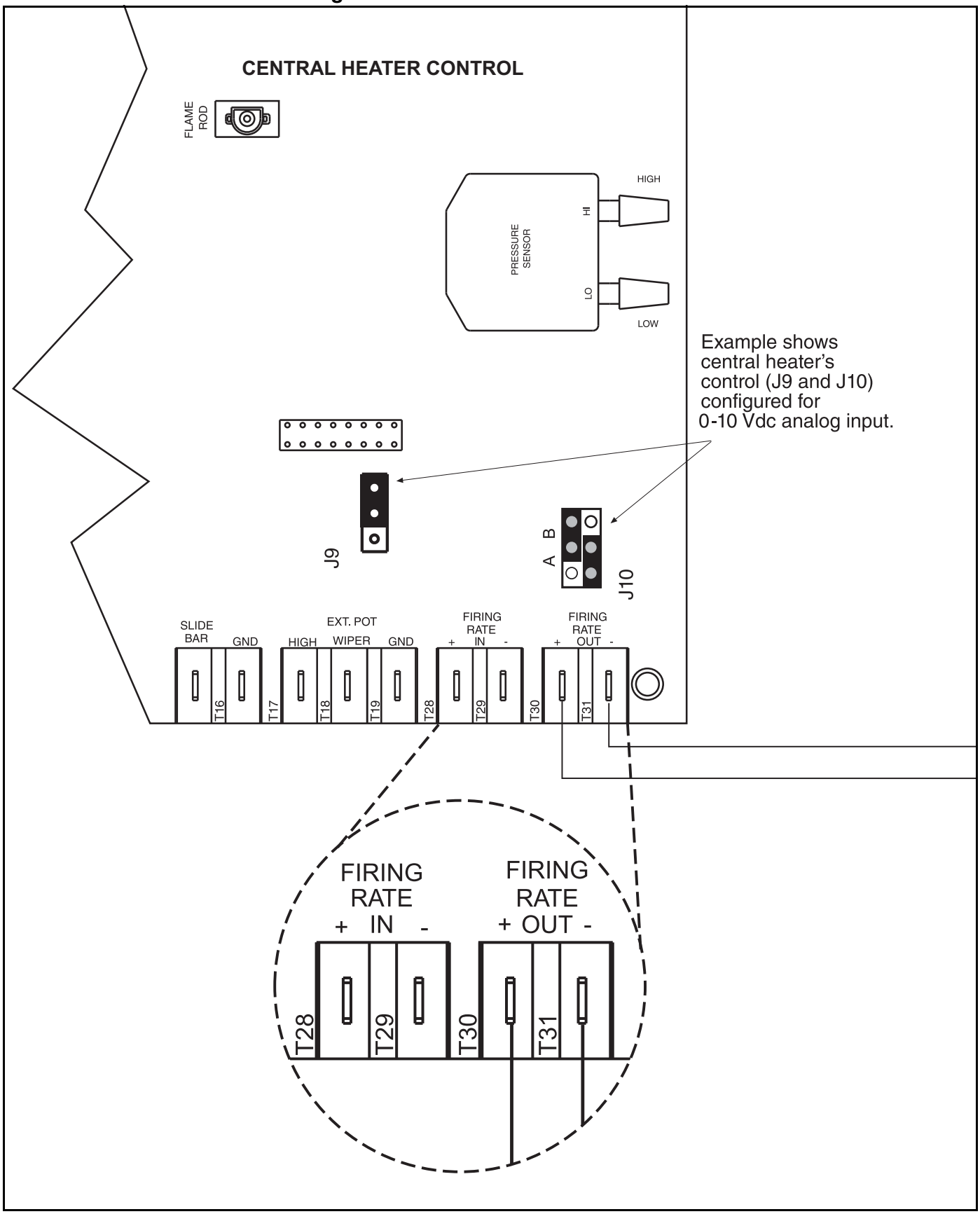

10.4 Communication Wiring within a Zone of Heaters (continued)

Satellite heaters will be wired in series to the central heater via low voltage control wiring.
Communication wiring uses the T28-T31 terminals on the control, *See Page 44 through Page 45, Figure 24*.

FIGURE 24: Communication Wiring within a Zone of Heaters (continued)

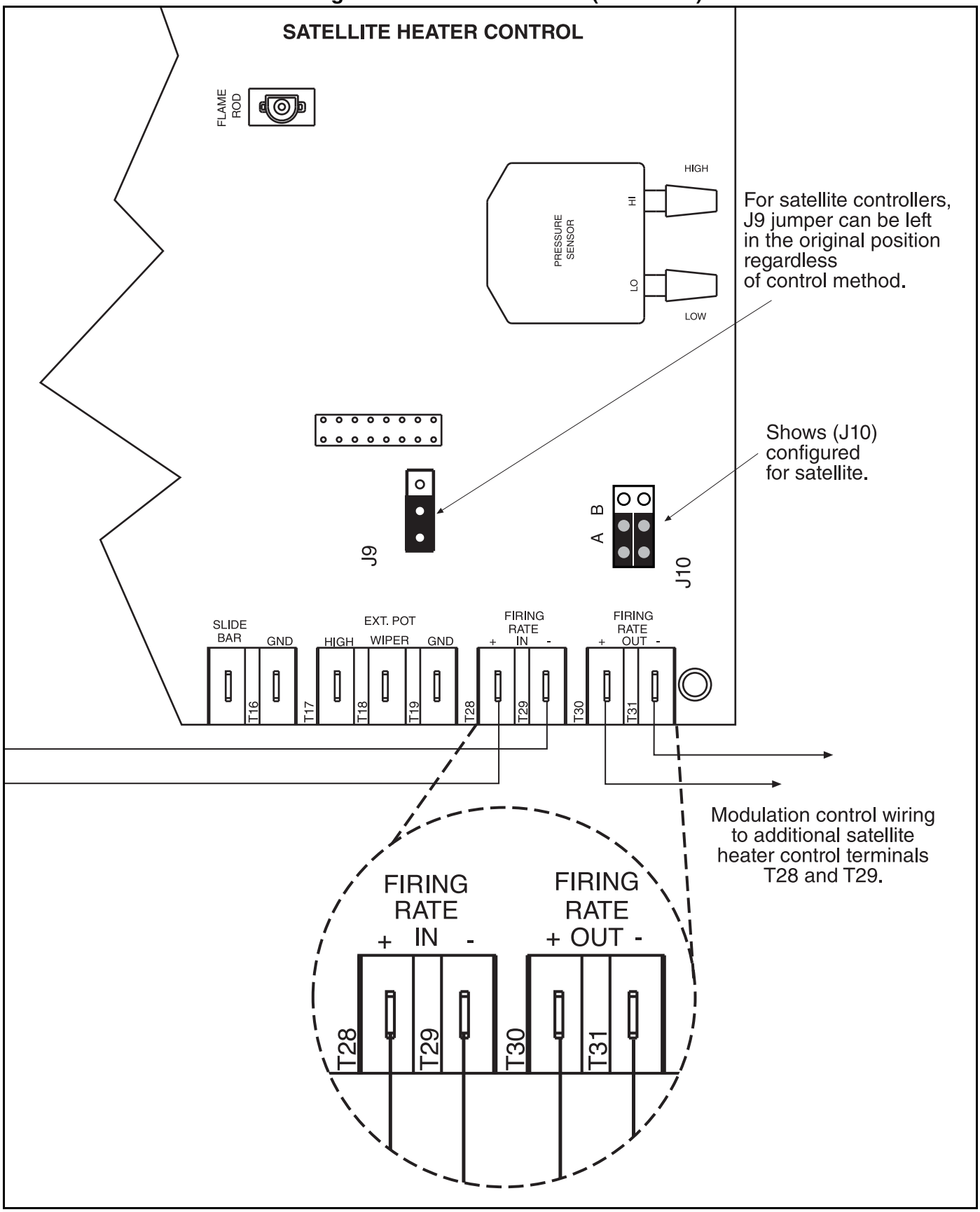

10.5 Heat Demand Control Wiring

The heater input can be controlled by any one of the following heat demand control devices (control devices are wired to central heaters only):

10.5.1 Zone Sensor

The zone sensor (P/N 10081530) offers automatic control of heater input. Heater(s) modulates based on difference between sensed air temperature and the temperature setpoint. Heater modulation in response to air temperature changes is immediate. Setpoint is adjusted with the slide bar adjustment at the bottom of the sensor. ON/OFF switch (used to disable heater operation or reset heater from lockout) is located on the side of the sensor. *See Page 41, Figure 21* for wiring details.

10.5.2 Thermostat

A thermostat offers automatic control of heater input. The heater control is designed for use with a standard 2-wire or 4-wire low voltage electronic thermostat (not for use with thermostats that have a heat anticipator). Typical wiring connects the R and W wires to the heater control and does not connect the Y (cooling) and G (fan) wires to the heater control.

The heater can be used with thermostat, 24V (p/n 90425100) if set to 5 cycles per hour. Any other electronic thermostat without heat anticipator can be used if set to 5 or 6 cycles per hour.

On the control, the T24 and T25 (R and W) terminals supply 24 V to power an electronic thermostat. *See Page 46, Figure 25* for wiring details. Consult the factory for other thermostat wiring configurations.

Heater(s) modulates based on heater and thermostat cycle timing, history and desired setpoint by using a pre-programmed algorithm. When using thermostat control, heater modulation response to rapid air temperature change is not immediate. Thermostat control is not recommended for use in areas with frequent or high air changes.

It is important to note that during normal operation, heater cycle continues beyond meeting thermostat setpoint.

FIGURE 25: Thermostat Control Wiring Diagram

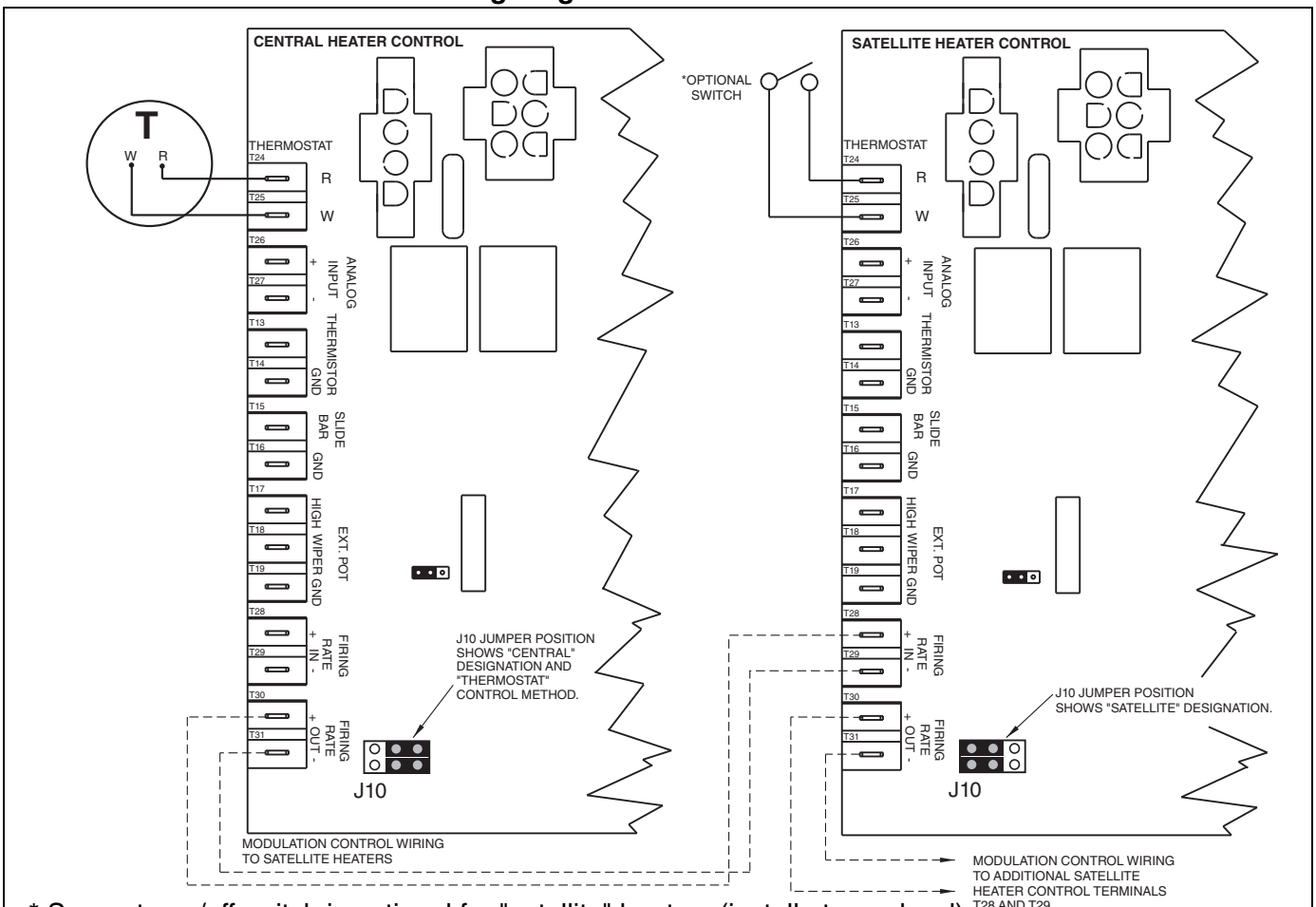

* Separate on/off switch is optional for "satellite" heaters (install at user level).
On/Off switch is used to disable heater operation or reset a heater that is in "lockout" mode.
If on/off switch is not desired, leave jumper wire between R and W terminals in place.

10.5.3 Analog Signal Modulating Thermostat (P/N 90425105)

A programmable, 7-day programming, modulating thermostat can be installed to supply an analog (4-20mA) or (2-10Vdc with 500 Ohm resistor) control signal to dictate the heater(s) firing rate. The thermostat shall energize the T24 and T25 (R and W) terminals. For thermostat wiring, *See Page 51, Figure 28* and *Page 52, Figure 29*. Optional room sensors (P/N 10081520) and outdoor air sensors (P/N 10081521) are available.

Room temperature averaging networks can be created with up to nine room sensors (P/N 10081520). Refer to thermostat installation instructions for wiring.

10.5.4 Analog Signal Modulating Thermostat with LonWorks® Communication (P/N 90425104)

If LonWorks® communication is required, a modulating thermostat can be installed to supply an analog (4-20mA or 2-10Vdc) signal to control the heater(s) firing rate. For thermostat wiring, *See Page 51, Figure 28* and *Page 52, Figure 29*. Optional room sensors (P/N 10081520) and outdoor air sensors (P/N 10081521) are available for this thermostat, as well.

The modulating thermostat with LonWorks® provides networking capability in a LonWorks® system. Communications port running at 78 kilobits per second (kbs), this thermostat can be configured to perform a variety of activities in which data is sent or received on the LonWorks®. Information that can be shared, viewed and modified with network includes:

- Current year, month, day, hour, minute, second.
- System Mode.
- Space Temperature
- Outdoor air temperature
- Current setpoint
- Occupied/Unoccupied schedule commands.
- Space Temperature

10.5.5 Analog signal Modulating with BACnet® Programmable Thermostat (P/N 90425109).

If BACnet® communication is required, a BACnet® enabled modulating thermostat can be installed to supply an analog output (0-10VDC) signal control to dictate the heater(s) firing rate. For thermostat wiring, *See Page 53, Figure 30*.

This thermostat is a flexible wall-mounted stand-alone control with combined controller/sensor. Temperature sensing is standard with optional humidity and motion sensing. BACnet® connections allow integral peer to peer BACnet® MS/TP LAN network communications with configurable baud rates and can easily integrate with a building automation system.

MS/TP Wiring

Connect the -A terminal in parallel with all other -A terminals on the network and the +B terminal in parallel with other +B terminals.

10.5.6 Sequence of Operation for Modulating Thermostats

The thermostat will control the heater(s) firing rate based on the demand signal communicated from thermostat program taking into account space temperature. The thermostat will energize T25 (W) terminal. At high heat, a demand signal will turn the heater(s) on at maximum heater(s) firing rate. Once the room temperature gets close to the thermostat set point, then the thermostat program will slow the heater(s) firing rate down until the room temperature reaches the thermostat set point.

10.5.7 Cable Termination

Table lists wiring types, sizes and distances for modulating thermostat with LonWorks® communication (P/N 90425104), modulating thermostat without communication (P/N 90425105) and BACnet® programmable thermostat (P/N 90425109)

Table 4: Cable Requirements

Wire Function	Recommended Wire Size (Minimum)	Specification or Requirement	Distance (Maximum)
Digital Outputs	18 AWG (0.75 sq mm)	Standard thermostat wire	1000 ft (304 m)
Modulating Outputs	18 AWG (0.75 sq mm)	1 pair	500 ft (152 m)
Outdoor Air Temperature Sensor	18 AWG (0.75 sq mm)	1 pair	500 ft (152 m)
Remote Sensor	18 to 22 AWG (0.75 to 0.34 sq mm)	Twisted pair wire	1000 ft (304 m)
Power Wiring	18 to 14 AWG (0.75to 2.0 sq mm)	NEC Class II 140ºF (60°C)	Limited by line-loss effects on power consumption.
LonWorks® (P/N 90424104 only)	18 AWG (0.75 sq mm) nonshielded	1 pair	Refer to E-bus Wiring Guide 74-2865 for maximum length and generic cable specifications.
MS/TP (P/N 90425109)	18 AWG (0.75 sq mm) Shield	Belden cable #82760 or equivalent	Refer to Thermostat Installation Guide

Power Requirements

Modulating thermostats require 24 volts, AC power.

10.5.8 Remote Analog Signal

Remote Analog Signal 0-10 Vdc or 4-20mA output from external controller or Building Management System (BMS) directly dictates heater(s) firing rate. An algorithm must be programmed into the BMS or external controller to receive zone air temperature signals from its own temperature sensors and then deliver an output signal to the heater(s) for the desired firing rate.

For 0-10Vdc control of the heater(s) firing rate, the following control conditions apply:

ON/OFF relay at the external controller or BMS must be wired to R and W terminals on the heater control board to turn the heater ON and OFF.

Minimum rated input at 1% of signal (0-1Vdc).

Full rated input at 90% of signal (9Vdc).

Input varies linearly between 1Vdc and 9Vdc.

For 4-20mA control of the heater(s) firing rate, the following control conditions apply:

ON/OFF relay at the external controller or BMS must be wired to R and W terminals on the heater control board to turn the heater ON and OFF.
(Open Circuit = OFF, Closed Circuit = ON).
Minimum rated input at 1% of signal (0-4 mA).
Full rated input at 90% of signal (18 mA).
Input varies linearly between 4 mA and 18 mA.

BMS controllers often offer PID loop control that can optimize output signal and rate of change of the output signal. Common analog application is defined as follows:

1. BMS sensors that monitor zone air temperatures are located in the heating space.
2. Based on sensed temperatures, the BMS will output an analog signal for the desired heater(s) firing rate.
3. As heater(s) receive the analog signal from the BMS, the heater(s) modulate to the corresponding firing rate.
4. As sensed air temperature rises closer to the desired temperature setpoint, the BMS will reduce the output signal, in turn reducing heater firing rate.
5. Upon satisfying temperature setpoint, the BMS will either:
   a. Turn off the heater.
   b. Reduce the signal so that the minimum heater firing rate is maintained until the sensed temperature rises above the setpoint to a cut-off limit temperature when the BMS turns off the heater.

FIGURE 26: Analog Control Signal Wiring Diagram

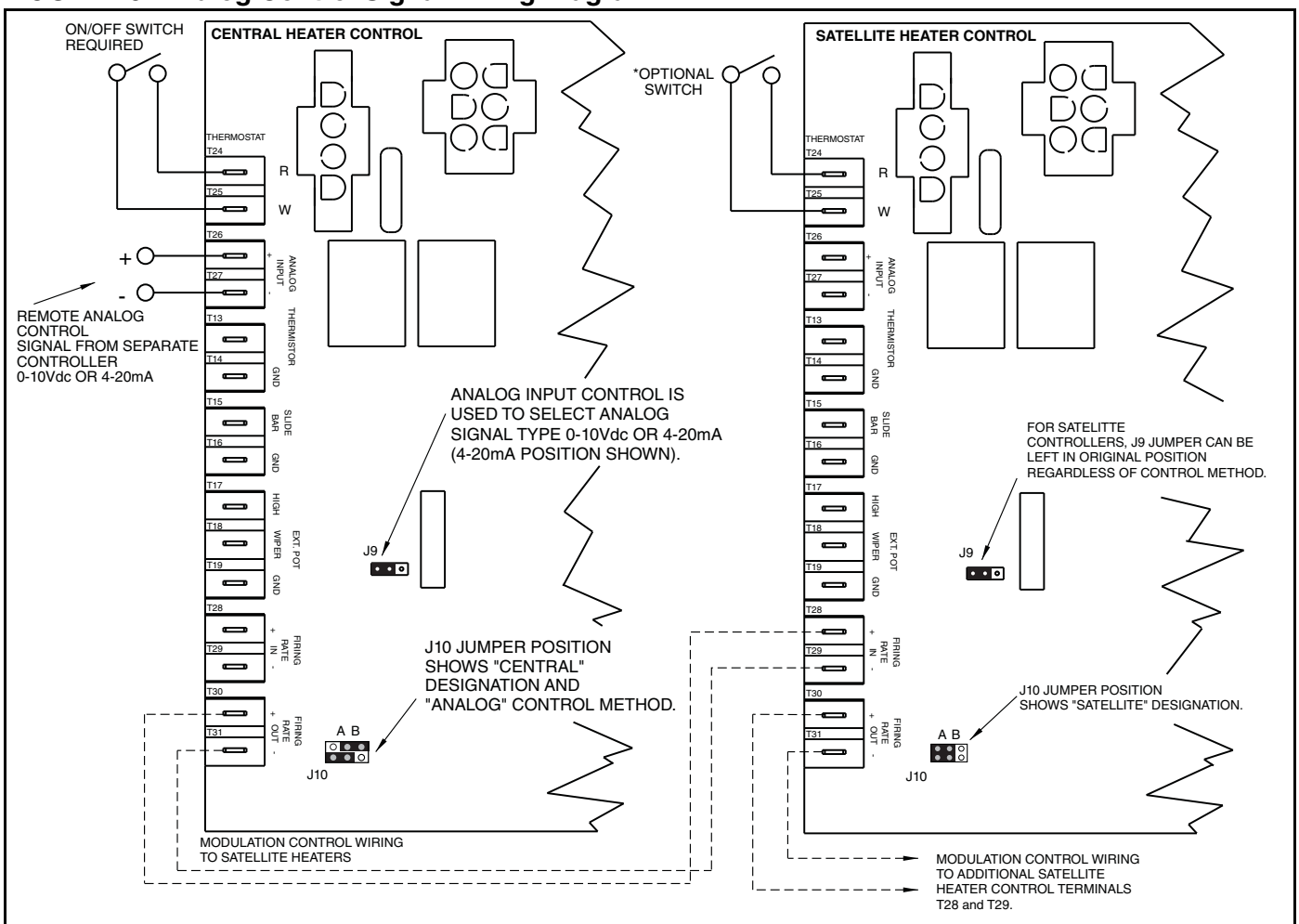

* Separate on/off switch is optional for "satellite" heaters (install at user level). On/Off switch is used to disable heater operation or reset a heater that is in "lockout" mode. If on/off switch is not desired, leave jumper wire between R and W terminals in place.

10.5.9 Potentiometer Control Device

Potentiometer (10K Ohm"Linear Taper") device offers manual control over heater(s) firing rate. This type of potentiometer can be found at Radio Shack®. Potentiometer dial position directly dictates heater(s) firing rate. Dial positions range between "Min" and "Max". Minimum and maximum heater firing rates (inputs) are marked on the heater's rating plate. ON/OFF switch or thermostat is used to disable heater operation or reset heater from lockout.

FIGURE 27: Potentiometer Control Wiring Diagram

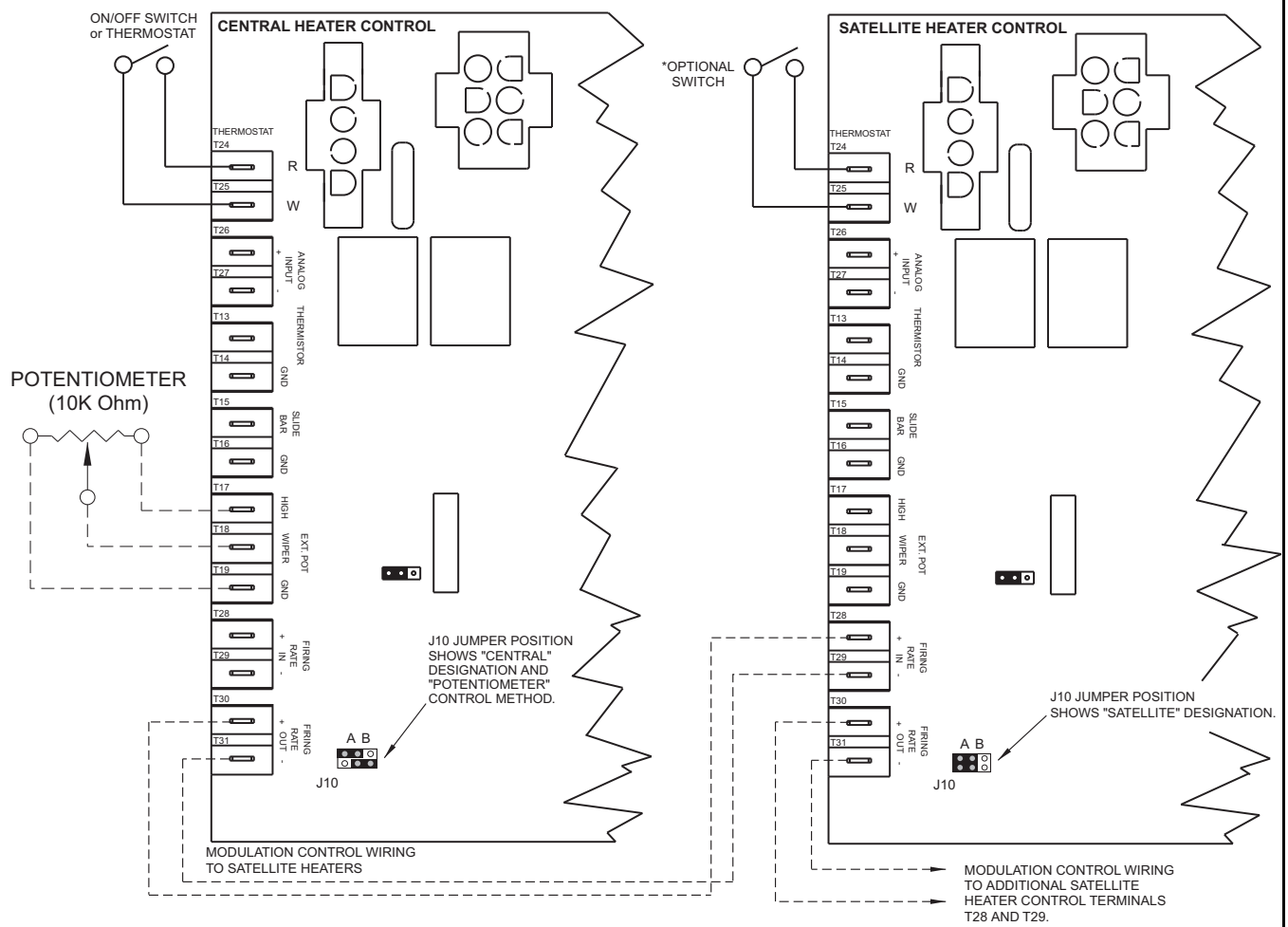

* Separate on/off switch is optional for "satellite" heaters (install at user level).
On/Off switch is used to disable heater operation or reset a heater that is in "lockout" mode.
If on/off switch is not desired, leave jumper wire between R and W terminals in place.

FIGURE 28: Modulating Thermostat Wiring Diagram (LonWorks® [4-20 mA] optional)

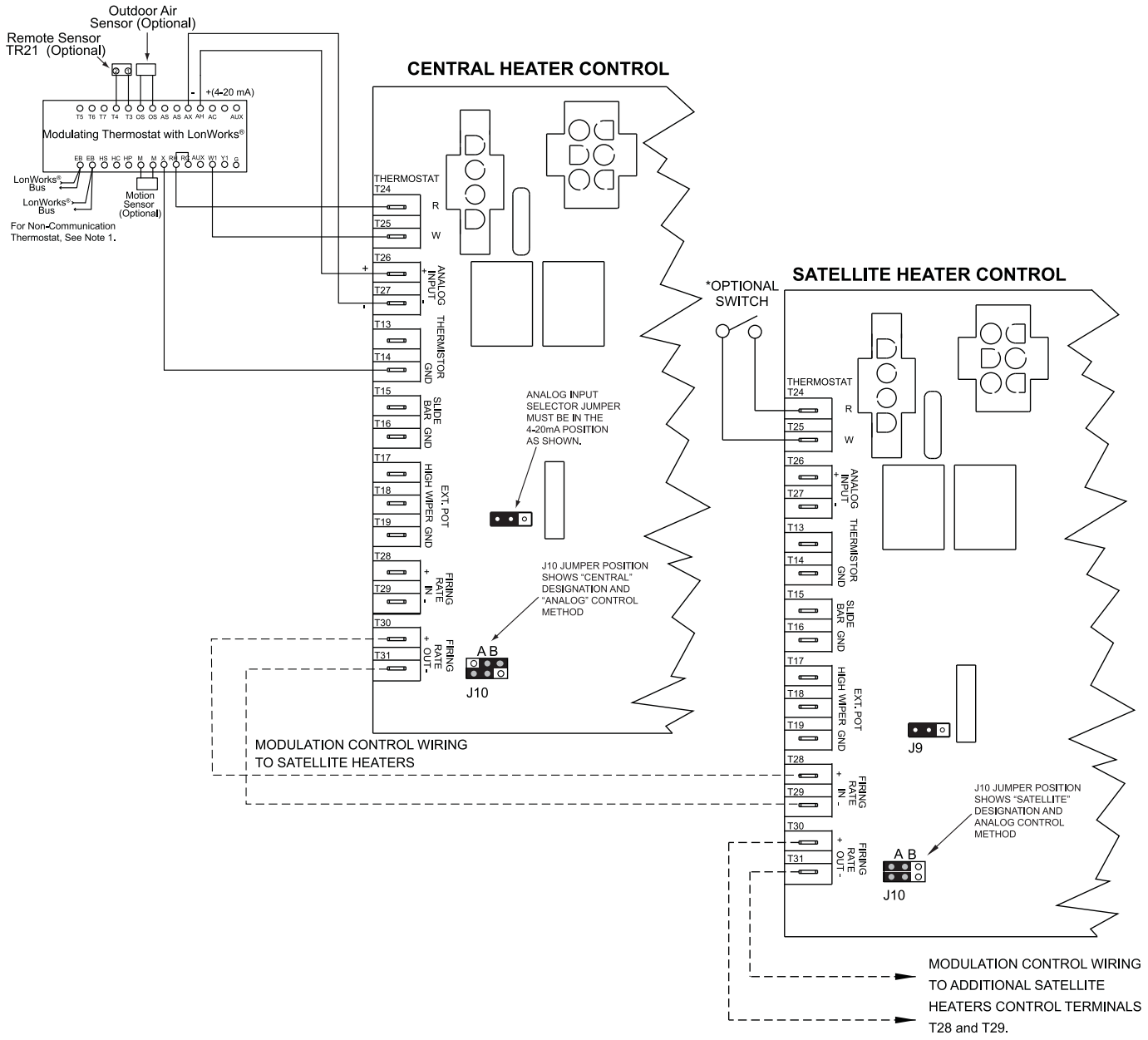

NOTE: 1. For non-communicating thermostats without LonWorks® bus, thermostat terminals marked "EB" will be marked "_____" and no LonWorks® bus communication wires are used.

* Separate on/off switch is optional for "satellite" heaters (install at user level).
On/Off switch is used to disable heater operation or reset a heater that is in "lockout" mode.
If on/off switch is not desired, leave jumper wire between R and W terminals in place.

Description	Part Number
Thermostat, modulating	90425105
Thermostat, modulating LonWorks®	90425104

FIGURE 29: Modulating Thermostat Wiring Diagram (LonWorks® [2-10Vdc with 500 Ohm resistor] optional)

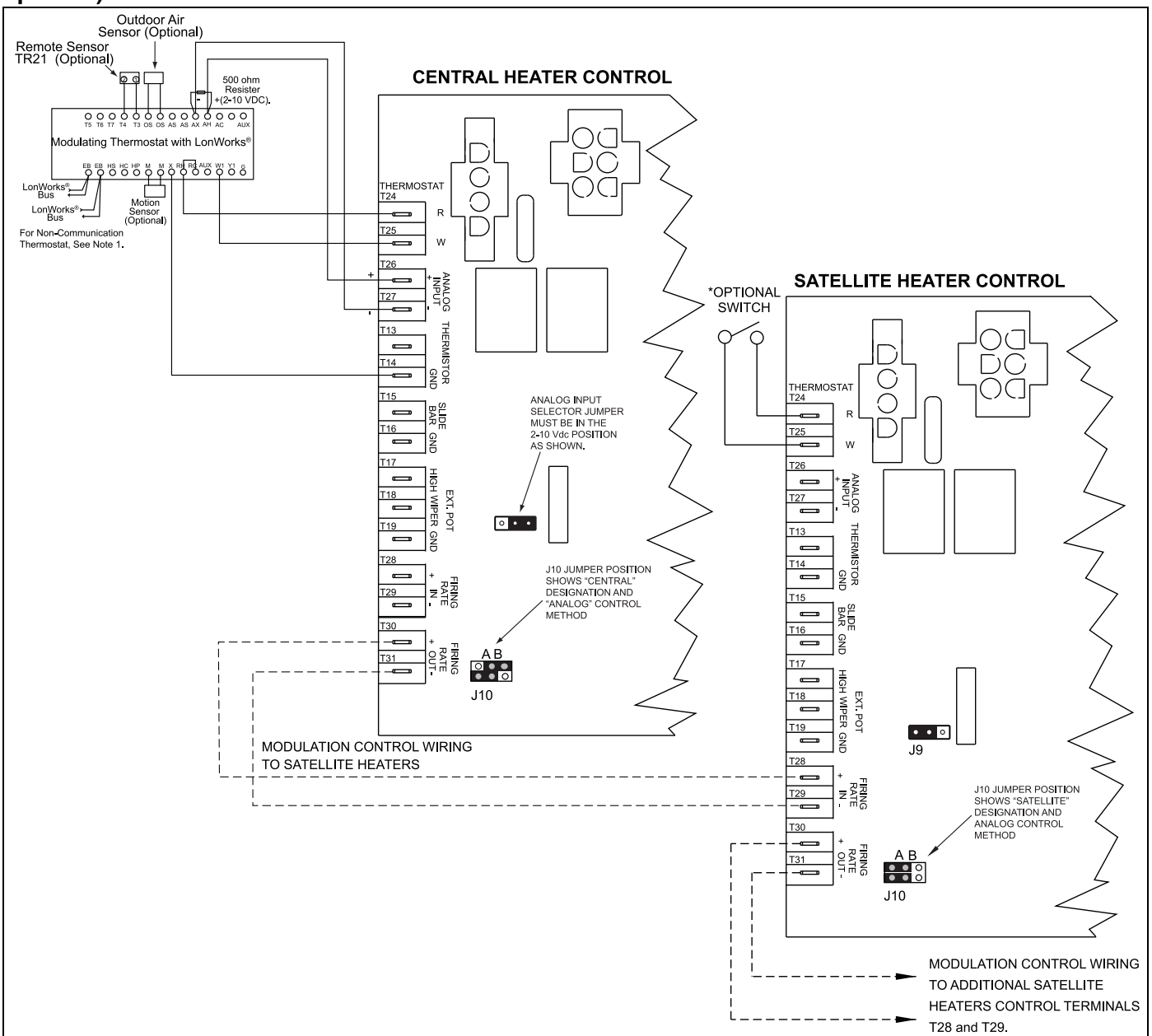

NOTE: 1. For non-communicating thermostats without LonWorks® bus, thermostat terminals marked "EB" will be marked "_____" and no LonWorks® bus communication wires are used.

* Separate on/off switch is optional for "satellite" heaters (install at user level).
On/Off switch is used to disable heater operation or reset a heater that is in "lockout" mode.
If on/off switch is not desired, leave jumper wire between R and W terminals in place.

Description	Part Number
Thermostat, modulating	90425105
Thermostat, modulating LonWorks®	90425104

FIGURE 30: Modulating Thermostat Wiring Diagram with BACnet® (optional)

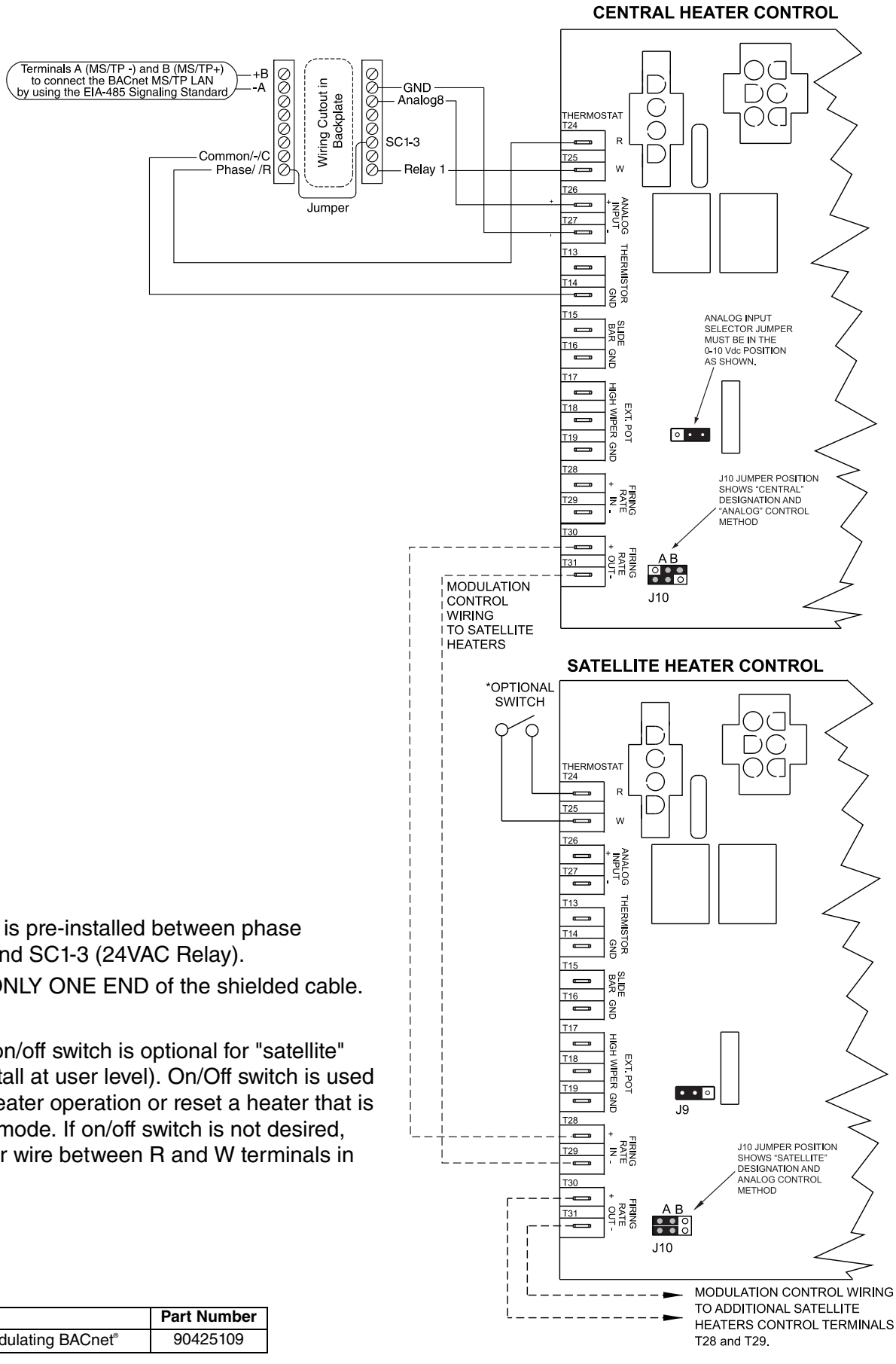

NOTES:

1. A jumper is pre-installed between phase R(24VAC) and SC1-3 (24VAC Relay).
2. Ground ONLY ONE END of the shielded cable.

* Separate on/off switch is optional for "satellite" heaters (install at user level). On/Off switch is used to disable heater operation or reset a heater that is in "lockout" mode. If on/off switch is not desired, leave jumper wire between R and W terminals in place.

Description	Part Number
Thermostat, modulating BACnet®	90425109

10.6 Internal Wiring

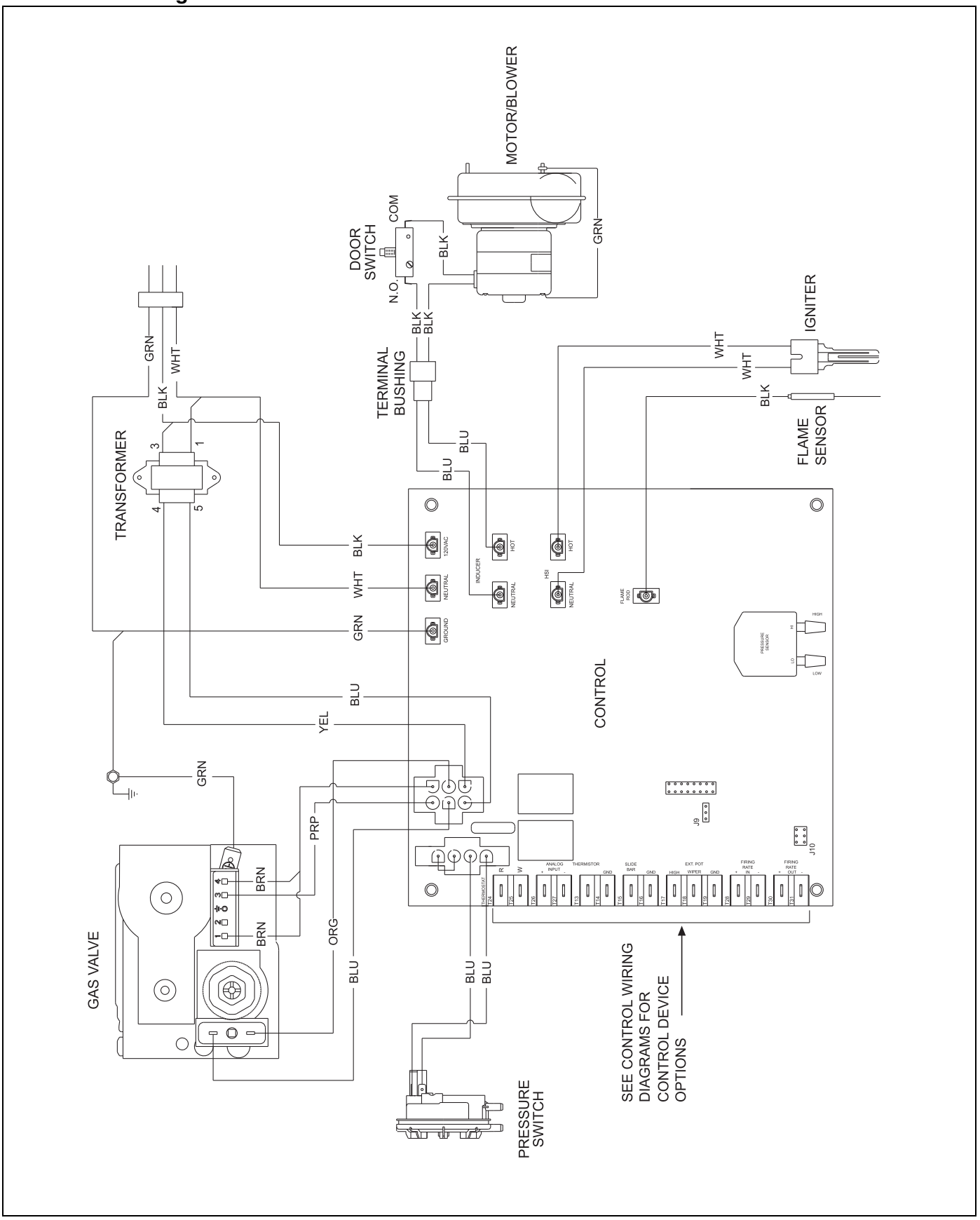

See Page 41, Section 10.2 through Page 50, Section 10.5.9 for temperature control device options and wiring schematic.

10.7 Ladder Diagram

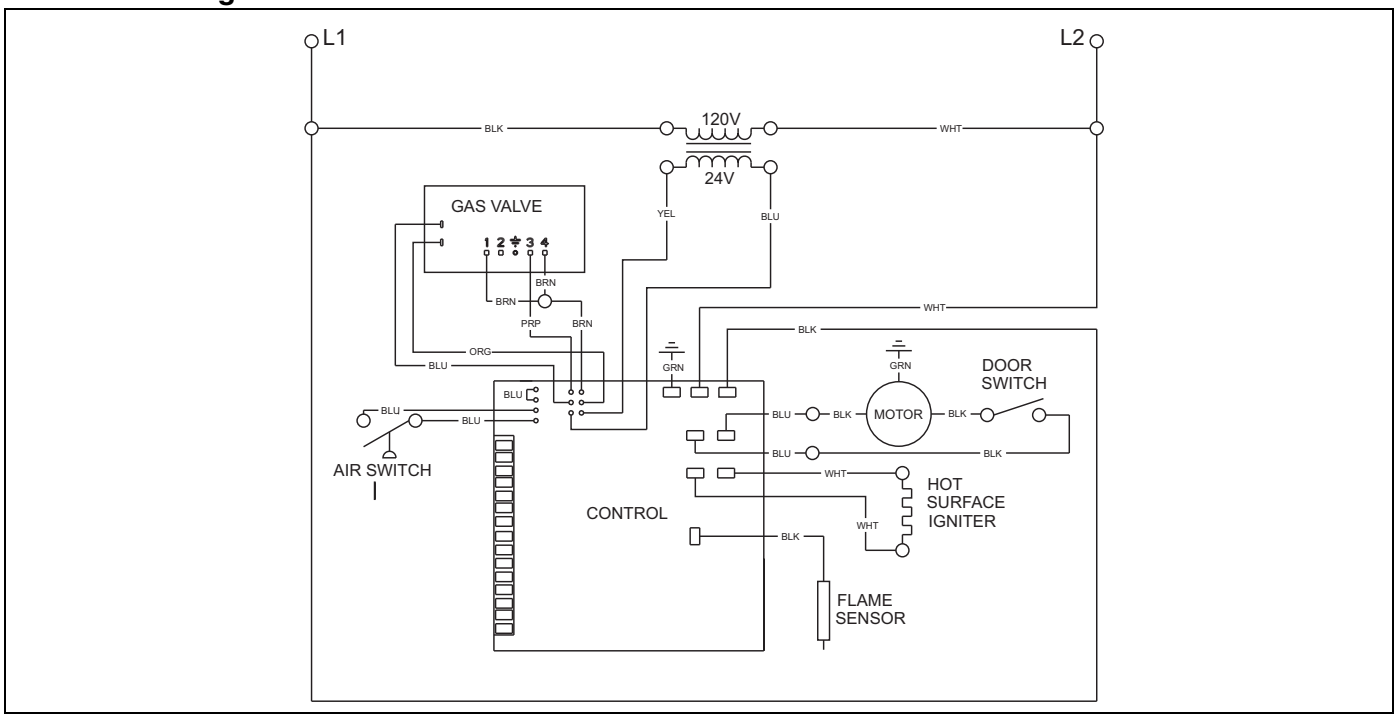

See Page 41, Section 10.2 through Page 50, Section 10.5.9 for temperature control device options and wiring schematic.

10.8 Electrical Connection to the Burner

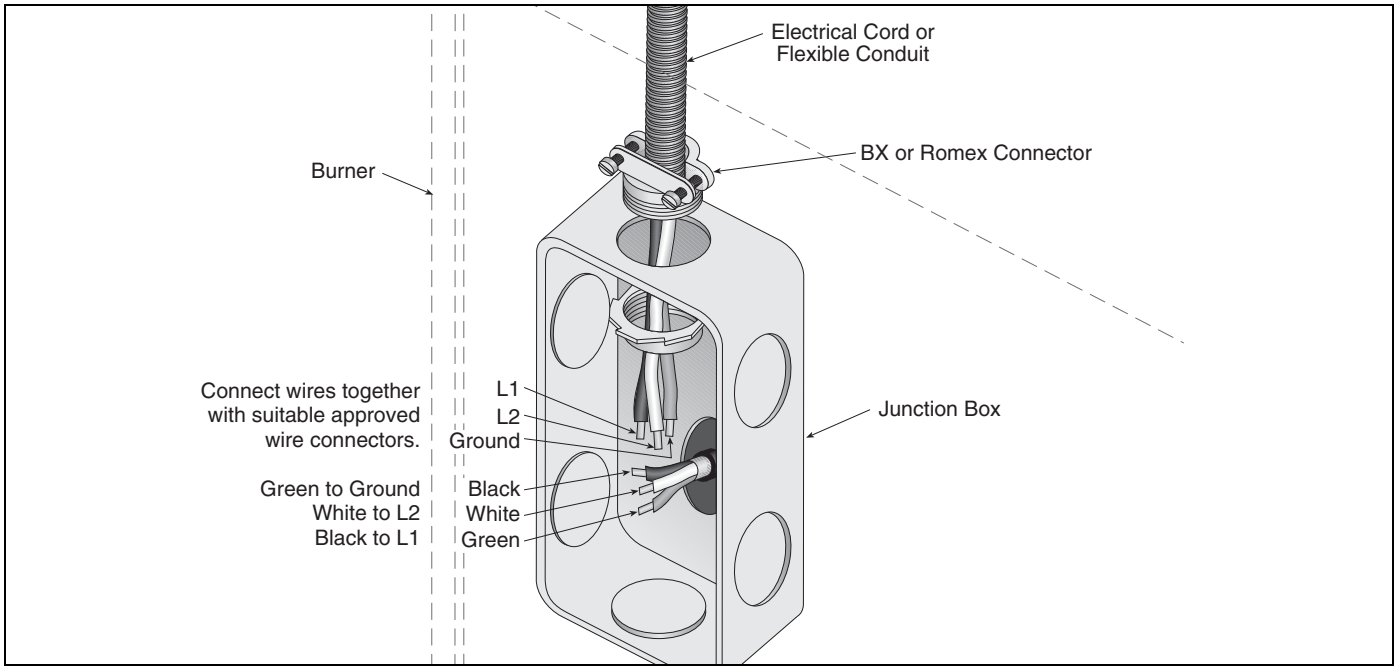

10.9 Low Voltage Control Wiring Installation

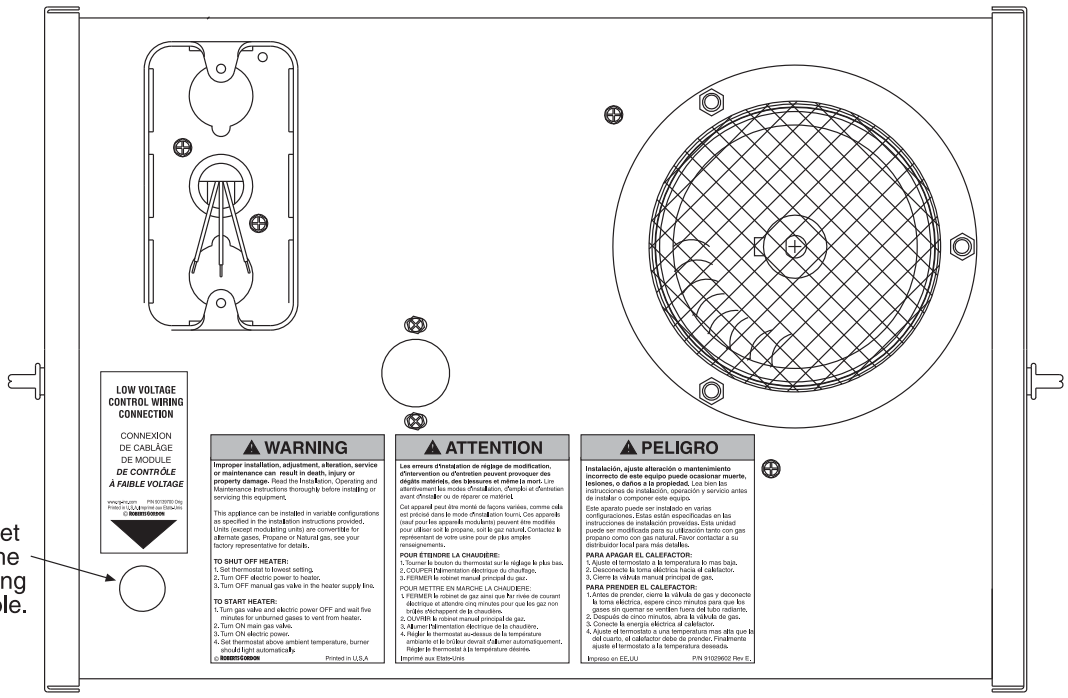

Install cable grommet and tie in the low voltage wiring access hole.

Heater Back View

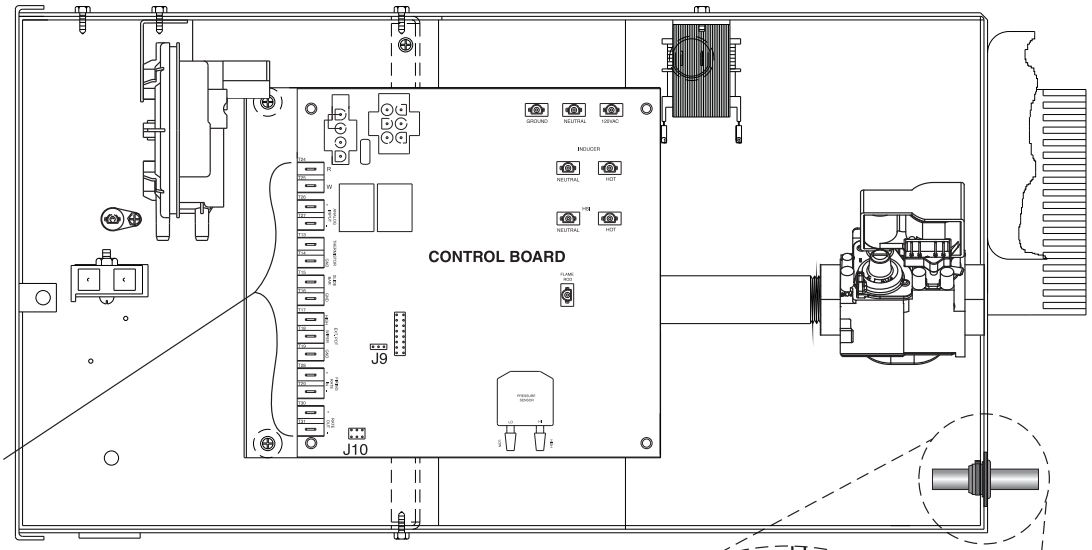

Attach supplied wire terminal receptacles to ends of control wiring. Attach control wiring to appropriate tabs on control board.

Heater Side View

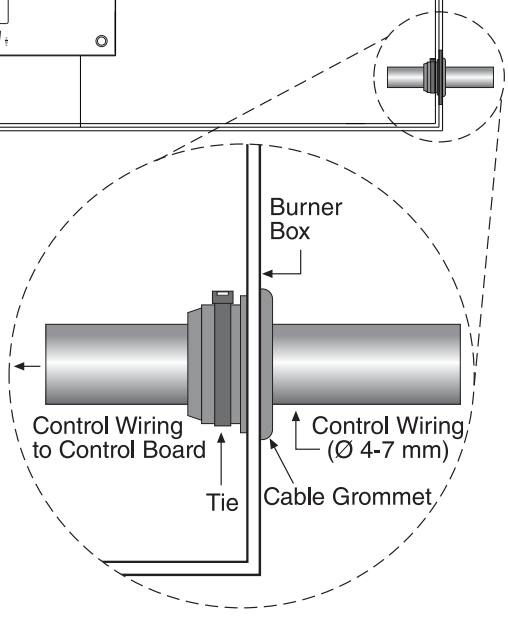

Description	Part Number
Cable Grommet with Tie	91309605

SECTION 11: OPERATION AND MAINTENANCE

⚠ DANGER	⚠ WARNING		
Electrical Shock Hazard **Disconnect electric before service.** **Heater must be connected to a properly grounded electrical source.**	**Explosion Hazard** **Turn off gas supply to heater before service.**	**Burn Hazard** **Allow heater to cool before service.** **Tubing may still be hot after operation.**	**Cut/Pinch Hazard** **Wear protective gear during installation, operation and service.** **Edges are sharp.**
Failure to follow these instructions can result in death, electric shock, injury or property damage.			

11.1 Sequence of Operation

The control inside the heater's control compartment is equipped with a tri-color LED. The LED offers comprehensive diagnostic capability. The LED status will be referenced throughout this section.

1. When the control is powered and there is no call for heat from external heat demand device, the LED on the control flashes slow green; LED is ON for the same period it is OFF.
2. On a call for heat from the heat demand device, the heater will go to PRE-PURGE. The LED indicates one green flash. The blower speed will vary as the pressure switch setpoints are verified. When the PRE-PURGE is successfully completed, the heater will go into the PRE-IGNITION state and power the hot surface igniter (H.S.I.).
3. After the igniter warms up, the heater will go to the IGNITION state. Power is supplied to the gas valve operator, gas flows, ignites and the flame is proven. The LED shows two green flashes on the LED. If a flame is not sensed, the heater will RETRY, *See Item 6* below for further details.
4. When the IGNITION state is completed, the heater will go to WARM UP state. The unit will fire at maximum input for 15 seconds. When the WARM UP state is completed the device will go into RUN state. The control board will monitor the heat demand device and modulate the heater input to meet the demand. The LED still shows two green flashes.
5. When the call for heat has been satisfied, the heater closes the gas valve. The blower continues to run for a 45 second post-purge period. After the post-purge, the heater turns OFF and the LED on the control board flashes slow green.
6. If flame is lost at any time during heater operation, the heater will RETRY for ignition. Upon RETRY the LED shows a fast yellow flash (LED rapidly flashes). The heater will RETRY for ignition three times. After four ignition attempts, the heater will lockout for one hour or until reset. To reset the heater, remove power for 10 seconds, then re-apply power. Turn heater ON with call for heat from the heat demand device.

11.2 To Shut Off Heater

Set external heat demand device to lowest setting.

Turn OFF electric power to heater.

Turn OFF manual gas valve in the heater supply line.

11.3 To Start Heater

Turn gas valve and electric power OFF and wait five minutes for unburned gases to vent from heater.

Turn ON main gas valve.

Turn ON electric power.

Set heat demand device to desired temperature. Burner should light automatically.

11.4 Pre-Season Maintenance and Annual Inspection

To ensure your safety and years of trouble-free operation of the heating system, service and annual inspections must be done by a contractor qualified in the installation and service of gas-fired heating equipment.

Turn off gas and electric supplies before performing

service or maintenance. Allow heater to cool before servicing.

Before every heating season, a contractor qualified in the installation and service of gas-fired heating equipment must perform a thorough safety inspection of the heater.

For best performance, the gas, electrical, thermostat connections, tubing, venting, suspensions and overall heater condition should be thoroughly inspected.

NOTE: Gas flow and burner ignition are among the first things that should be inspected.

Please *See Page 58* for suggested items to inspect.

Installation Code and Annual Inspections:
All installation and service of VAL-CO equipment must be performed by a contractor qualified in the installation and service of equipment sold and supplied by Val-Co and conform to all requirements set forth in the VAL-CO manuals and all applicable governmental authorities pertaining to the installation, service, operation and labeling of the equipment.

To help facilitate optimum performance and safety, Val-Co recommends that a qualified contractor conduct, at a minimum, annual inspections of your VAL-CO equipment and perform service where necessary, using only replacement parts sold and supplied by Val-Co.

The Vicinity of the Heater	Do not store or use flammable objects, liquids or vapors near the heater. Immediately remove these items if they are present. *See Page 6, Section 3*.
Vehicles and Other Objects	Maintain the clearances to combustibles. Do not hang anything from, or place anything on, the heater. Make sure nothing is lodged underneath the reflector, in between the tubes or in the decorative or protective grilles (included with select models). Immediately remove objects in violation of the clearances to combustibles. *See Page 6, Section 3*.
Reflector	Support reflector with reflector hanger and support strap. Reflector must not touch tube. Make sure there is no dirt, sagging, cracking or distortion. Do not operate if there is sagging, cracking or distortion. Make sure reflectors are correctly overlapped. *See Page 20, Section 6.5.1*. Clean outside surface with a damp cloth.
Vent Pipe	Venting must be intact. Using a flashlight, look for obstructions, cracks on the pipe, gaps in the sealed areas or corrosion. The area must be free of dirt and dust. Clean as required. Remove any carbon deposits or scale using a wire brush. *See Page 31, Section 8*.
Outside Air Inlet	Inlet must be intact. Look for obstructions, cracks on the pipe, gaps in the sealed areas or corrosion. The area must be free of dirt and dust. Clean and reinstall as required.
Tubes	Make sure there are no cracks. Make sure tubes are connected and suspended securely. *See Page 12, Section 6*. Make sure there is no sagging, bending or distortion. Clean or replace as required.
Gas Line	Check for gas leaks. *See Page 37, Section 9*.

Burner Observation Window	Make sure it is clean and free of cracks or holes. Clean and replace as required.
Blower Scroll, Wheel and Motor	Compressed air or a vacuum cleaner may be used to clean dust and dirt.
Burner Cup and Orifice	Clear of obstructions (even spider webs will cause problems). Carefully remove any dust and debris from the burner.
Hot-Surface Igniter	Replace if cracked or broken.
Heat Demand Device: Thermostat, Zone Sensor, External Pot or 0-10 Vdc or 4 - 20 mA wiring	There should be no exposed wire or damage to the device or wiring. *See Page 39, Section 10*.
Suspension Points	Make sure the heater is hanging securely. Look for signs of wear on the chain or ceiling. *See Page 13, Figure 11*.
Decorative and Protective Grille (optional)	The grille must be securely attached. Check that the side reflector extensions are installed correctly and secured in place if necessary. (Decorative grille only.) *See Page 28, Section 7.5 and Page 30, Section 7.6* Make sure shield is installed correctly and secured in place if necessary. (Decorative grille only.) *See Page 29, Section 7.5.2*.
Lower Clearance Shield (optional)	The lower shield must be securely attached. Inspect shield support straps and lower clearance shield anchor points. *See Page 28, Section 7.4*. Make sure shield is installed correctly and secured in place if necessary. *See Page 28, Section 7.4*.
Silicone Tubing	Ensure tight, secure fit on all pressure fittings at gas valve, pressure switch, pressure sensor, burner partition, and blower outlet.
Gas Valve	Verify silicone tubing has a tight secure fit on "vent" fitting. Verify that plastic cap on covering pressure regulator adjustment screw is secure and has not been tampered with. Do not remove plastic regulator cap or attempt to adjust valve pressure regulator. Verify all wiring connections.
Wall Tag	If wall tag is present, make sure it is legible and accurate. Please contact Val-Co or your VAL-CO independent distributor, if you need a wall tag. *See Page 4, Section 2.1*.
Safety Labels	Product safety signs or labels should be replaced by the product user when they are no longer legible. Please contact Val-Co or your VAL-CO independent distributor to obtain replacement signs or labels. *See Page 2, Figure 1 through Page 3, Figure 2*.

SECTION 12: TROUBLESHOOTING

⚠ DANGER

Electrical Shock Hazard

Disconnect electric before service.

More than one disconnect switch may be required to disconnect electric from heater.

Heater must be properly grounded to an electrical source.

Failure to follow these instructions can result in death or electrical shock.

⚠ WARNING

Fire Hazard	**Explosion Hazard**	**Burn Hazard**	**Cut/Pinch Hazard**
Keep all flammable objects, liquids and vapors the minimum required clearances to combustibles away from heater. **Some objects will catch fire or explode when placed close to heater.**	**Turn off gas supply to heater before service.**	**Allow heater to cool before service.** **Tubing may still be hot after operation.**	**Wear protective gear during installation, operation and service.** **Edges are sharp.**

Failure to follow these instructions can result in death, injury or property damage.

12.1 Control LED

The control inside the heater's control compartment is equipped with a tri-color LED. The LED offers comprehensive diagnostic capability. The LED is showing some form of status signal at all times when the control is powered. The color of the LED differentiates normal from error conditions as follows:

GREEN indicates normal operation.

RED indicates an error condition.

YELLOW (fast flashing) indicates a RETRY attempt.

LED NOT LIT indicates no power to control.

12.2 General LED Codes

No LED:	No Power to control.
Slow Green:	LED slowly flashes on and off, indicates power to the control board but no call for heat.
GREEN, 1 flash:	Call for heat indicates the heater is performing the safe start pre-purge function or H.S.I. warm-up.
GREEN, 2 flashes:	Call for heat indicates the heater is performing light off, heater warm-up, or heater run.
GREEN, 3 flashes:	*Only applicable for thermostat control* Gas ON - No call for heat, unit modulating from single stage thermostat.
AMBER, 1 flash:	Call for heat when flame signal is below 1µA
AMBER, 2 flashes:	Gas ON - Call for heat when flame signal is below 1µA
AMBER, 3 flashes:	*Only applicable for thermostat control* Gas ON - No call for heat, unit modulating from single stage thermostat when flame signal is below 1µA.
AMBER, Fast Flashing:	Heater is in RETRY mode.
RED Steady LED:	Control FAILURE, No 24 V power supply.
RED, 1 flash:	Lockout- Insufficient sensed air pressure when blower is on. Condition could be caused by: • Air Side Door • Blower • Obstruction in inlet or outlet • Pressure hose fittings • Pressure Switch
RED, 2 flashes:	Lockout- Blower air pressure reads above zero level when blower is off. Condition is caused by a pressure sensor failure or complete blockage of air intake or exhaust vent.
RED, 3 flashes:	Lockout- Flame is sensed on when it should be off or off when it should be on. Could be caused by: • Flame Rod • H.S.I. • Gas Supply • 120 V Supply Polarity • Board Fault
RED, 4 flashes:	Lockout- Gas Valve. Condition caused by main valve on gas valve. Check gas valve wiring.
RED, 5 flashes:	Lockout- Board Failure. Board must be replaced.
RED, 6 flashes:	Not used.
RED, 7 flashes:	Lockout- Fuse Open. Condition could be caused by: • Fuse blown • High Limit Switch open a board location J3

RED, 8 flashes: Lockout- Pressure switch failed to operate or modulation current was incorrect.
Condition could be caused by:

- Pressure Sensor
- Pressure Switch (faulty or hoses reversed)
- Gas Valve Modulation Coil
- Wire Harness (6 wire)

RED, 9 flashes: Lockout- Air Supply.
Condition could be caused by:

- Blower
- Pneumatic Conections to Pressure Sensor
- Blockage in flue or inlet

12.3 Troubleshooting Flow Chart

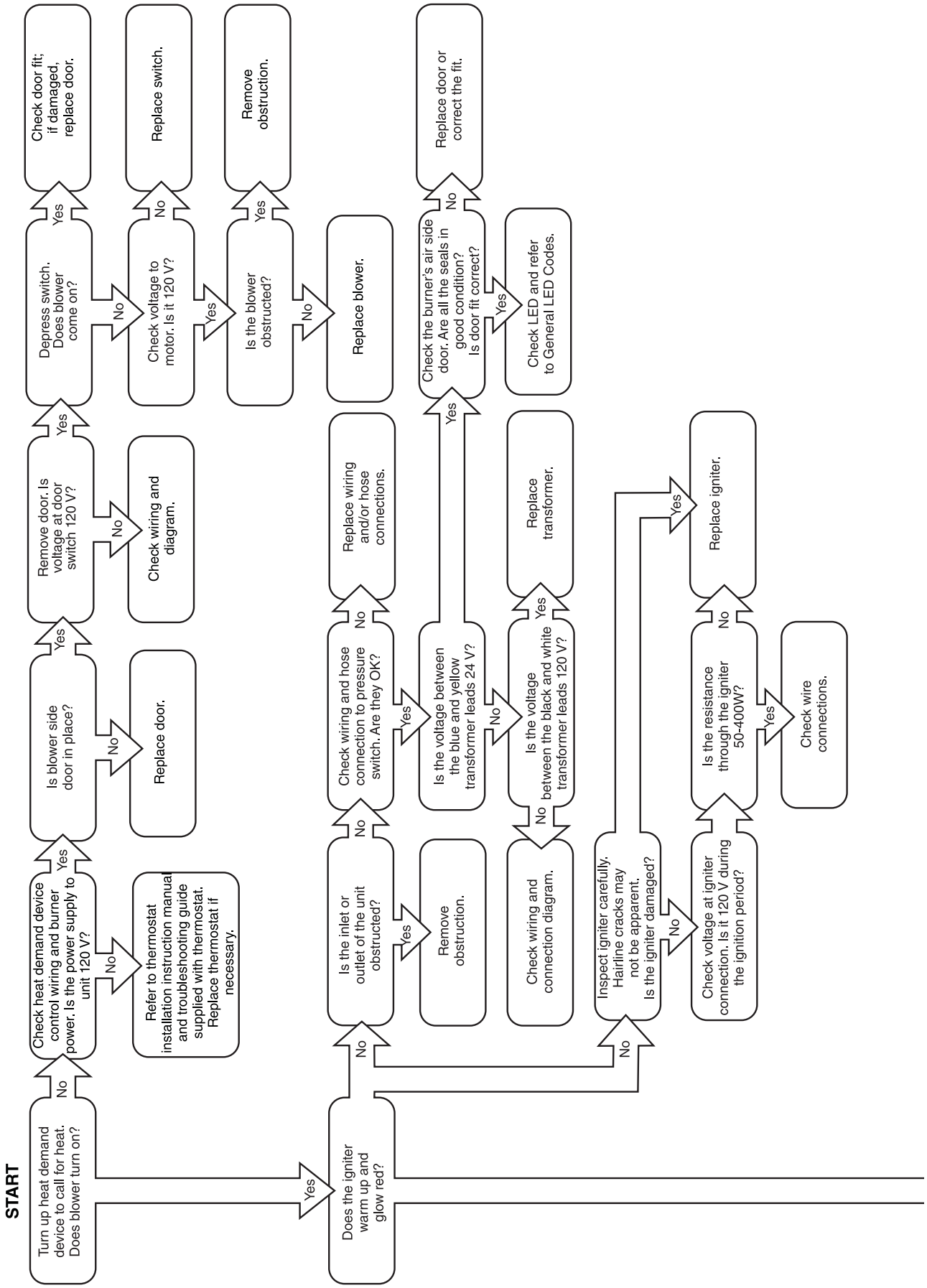

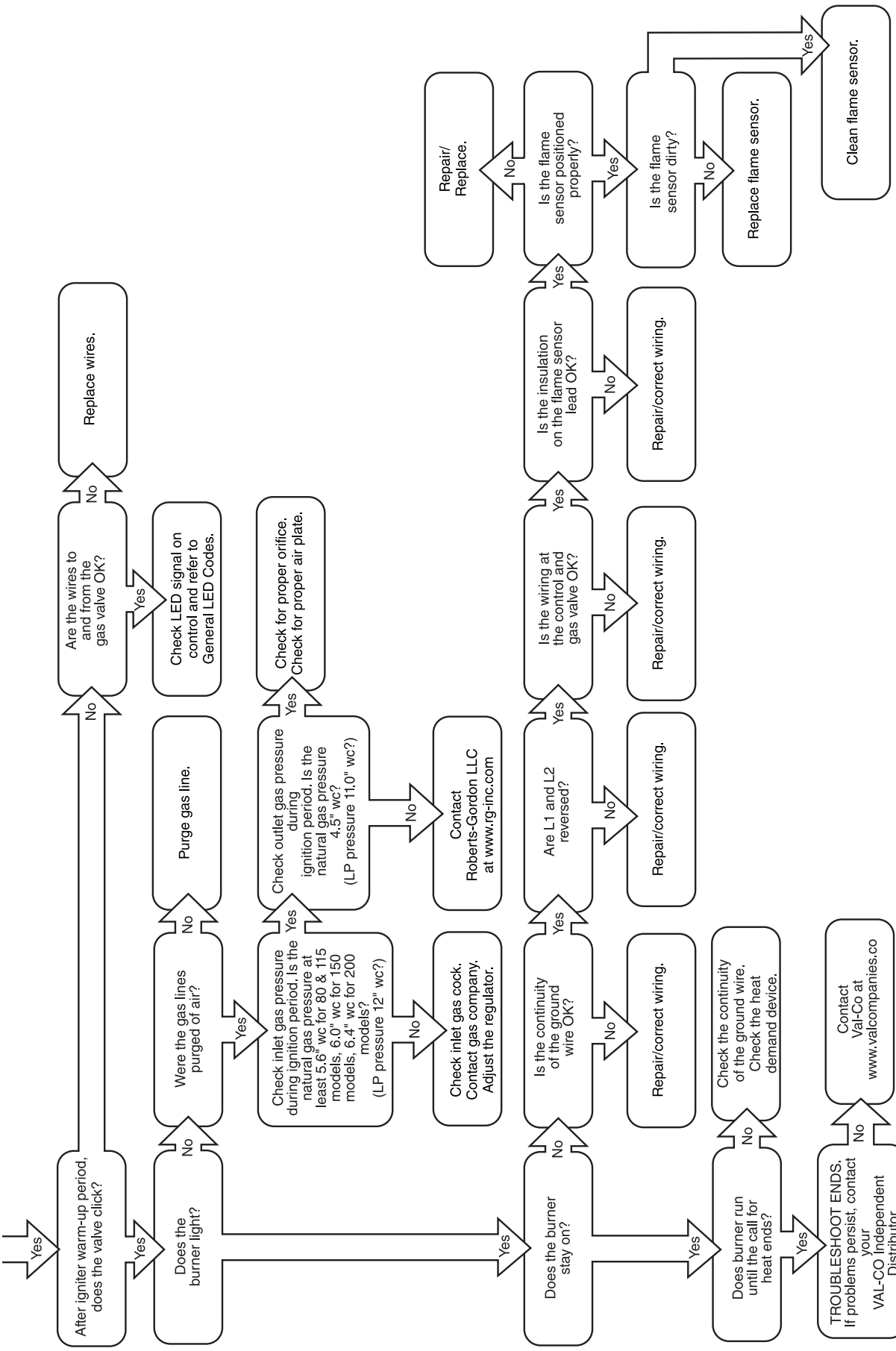
Yes
After igniter warm-up period, does the valve click?
No
Replace wires.
Yes
Are the wires to and from the gas valve OK?
No
Yes
Does the burner light?
No
Were the gas lines purged of air?
No
Purge gas line.
Yes
Check LED signal on control and refer to General LED Codes.
Yes
Check inlet gas pressure during ignition period. Is the natural gas pressure at least 5.6" wc for 80 & 115 models, 6.0" wc for 150 models, 6.4" wc for 200 models? (LP pressure 12" wc?)
Yes
Check outlet gas pressure during ignition period. Is the natural gas pressure 4.5" wc? (LP pressure 11.0" wc?)
Yes
Check for proper orifice. Check for proper air plate.
No
Check inlet gas cock. Contact gas company. Adjust the regulator.
No
Contact Roberts-Gordon LLC at www.rg-inc.com
Yes
Does the burner stay on?
No
Is the continuity of the ground wire OK?
No
Repair/correct wiring.
Yes
Are L1 and L2 reversed?
No
Repair/correct wiring.
Yes
Is the wiring at the control and gas valve OK?
No
Repair/correct wiring.
Yes
Is the insulation on the flame sensor lead OK?
No
Repair/ Replace.
Yes
Is the flame sensor positioned properly?
No
Replace flame sensor.
Yes
Is the flame sensor dirty?
No
Clean flame sensor.
Yes
Does burner run until the call for heat ends?
No
Check the continuity of the ground wire. Check the heat demand device.
Yes
TROUBLESHOOT ENDS. If problems persist, contact your VAL-CO Independent Distributor.
No
Contact Val-Co at www.valcompanies.co

12.4 Manifold Gas Pressure Measurement

⚠ WARNING

Carbon Monoxide Hazard

Do not adjust gas valve pressure regulator.

Do not tamper with sealed parts.

Pressure regulator is factory calibrated for safe operation.

Failure to follow these instructions can result in death or injury.

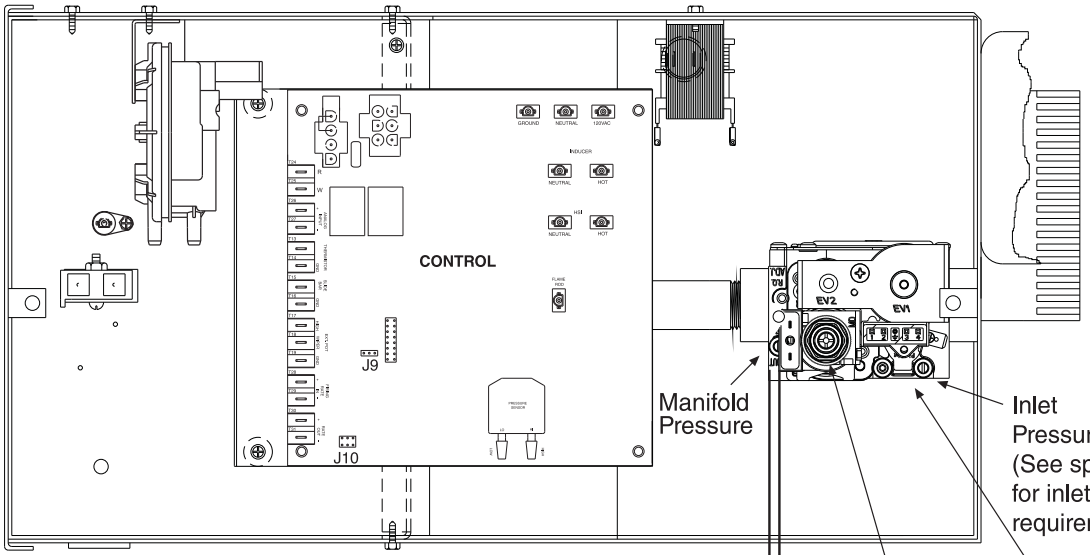

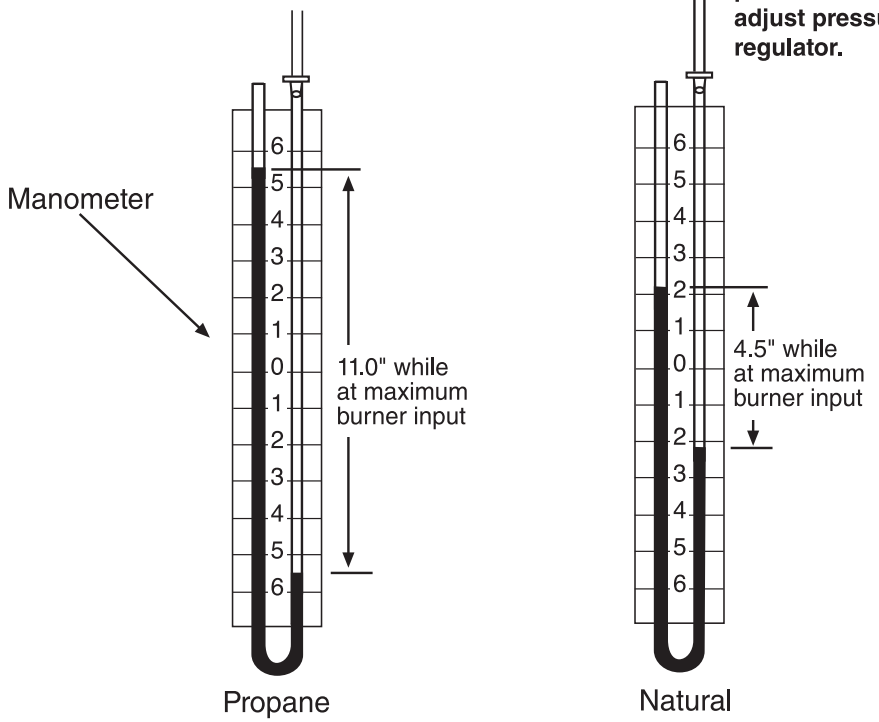

12.5 Pneumatic Connections

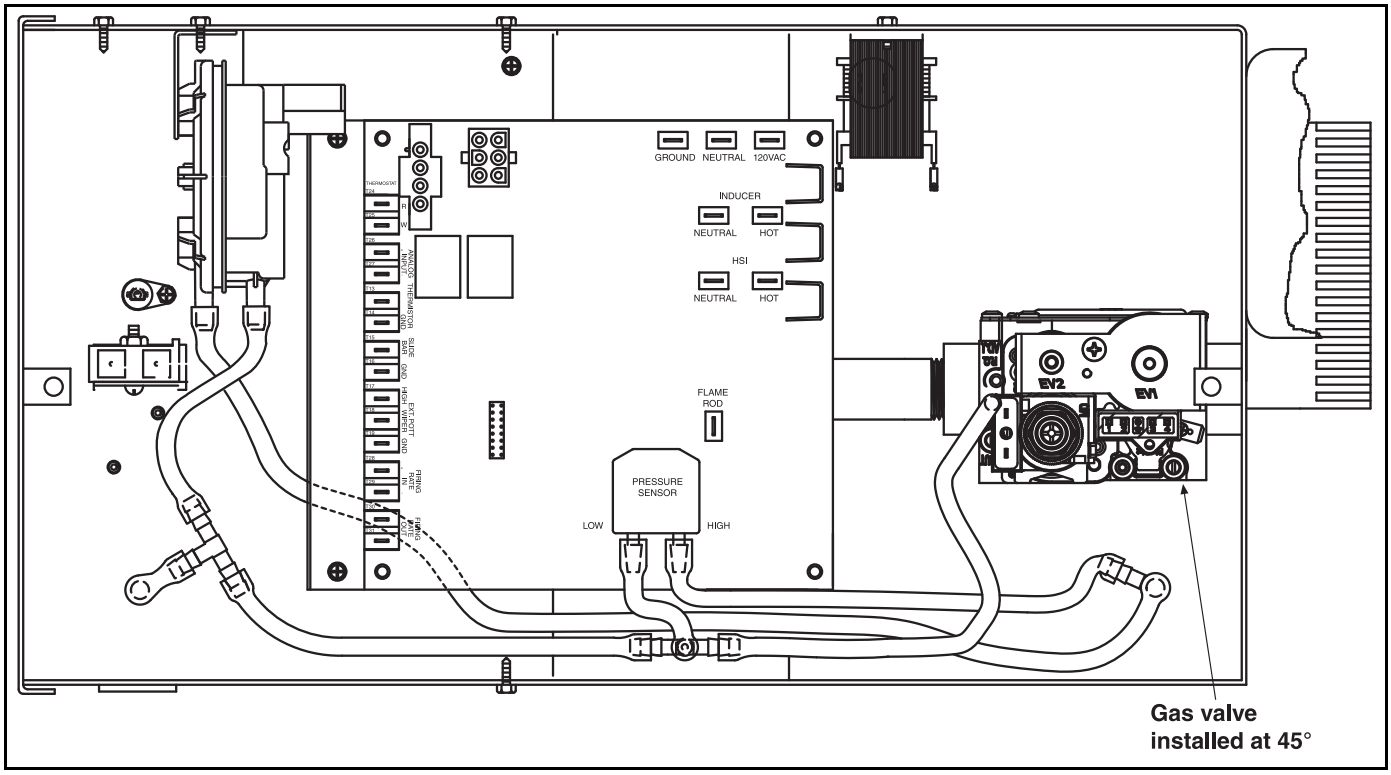

SECTION 13: REPLACEMENT PARTS

⚠ DANGER	⚠ WARNING		
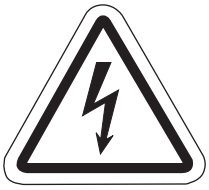			
Electrical Shock Hazard	Explosion Hazard	Fire Hazard	Carbon Monoxide Hazard

Use only genuine VAL-CO replacement parts per this installation, operation and service manual.

Failure to follow these instructions can result in death, electric shock, injury or property damage.

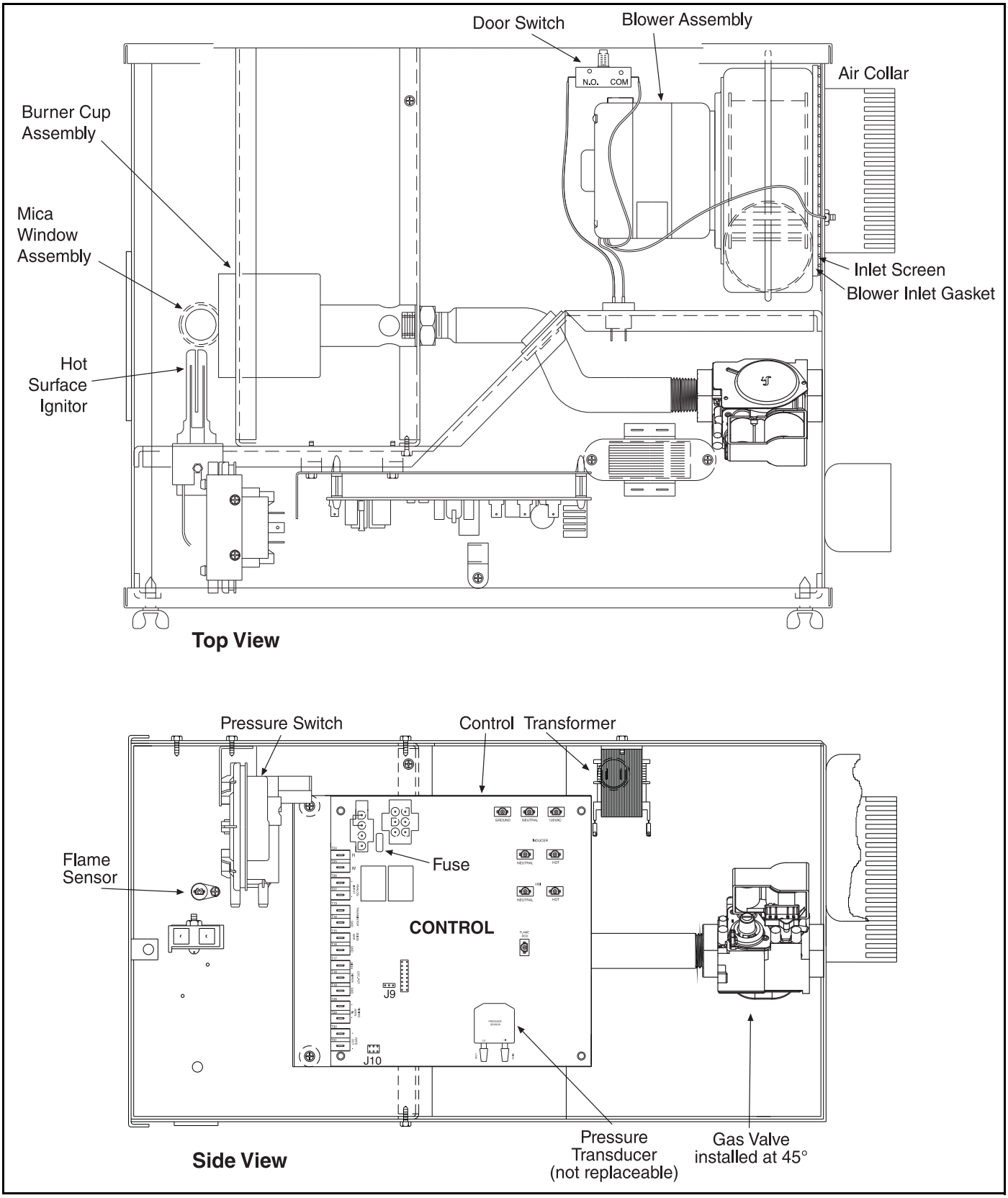
Door Switch
Blower Assembly
N.O.
COM
Air Collar
Burner Cup Assembly
Mica Window Assembly
Inlet Screen
Blower Inlet Gasket
Hot Surface Ignitor
Top View
Pressure Switch
Control Transformer
Flame Sensor
Fuse
CONTROL
J9
J10
Pressure Transducer (not replaceable)
Gas Valve installed at 45°
Side View

Description	Part Number
Gas Valve (Natural)	90033105K
Gas Valve (LP)	90033104K
Tube Gasket	02568200
Blower Inlet Gasket (80, 115 models)	03050900
Blower Inlet Gasket (150, 200 models)	90709910
Blower Assembly (80, 115)	90708602-P
Blower Assembly (150, 200)	90709900-P
Air Collar (80, 115 models)	91911700
Air Collar (150, 200 models)	91911701
Inlet Screen (80, 115)	03050800
Inlet Screen (150, 200)	09050001
Door Switch	90436800
Burner Cup Assembly	03020100
Hot Surface Igniter	90436600K
Mica Window Assembly	02553203
Flame Sensor	90439300
Transformer	90436900K
Fuse (Control) 3 A	91321403
Pressure Switch	
(80 NG, 80 LP, 115 NG, 115 LP)	90439812K
(150 NG, 150 LP, 200 NG, 200 LP)	90439803K
Control	
80NG	90320109K
80LP	90320110K
115NG	90320111K
115LP	90320112K
150NG	90320113K
150LP	90320114K
200NG	90320115K
200LP	90320116K

SECTION 14: GENERAL SPECIFICATIONS

14.1 Material Specifications

14.1.1 Reflectors

.024 Aluminum
(Optional .024 Stainless Steel Type 304)

14.2 Heater Specifications

14.2.1 Control System

Modulating Gas Valve and Hot Surface Electronic Ignition Control with Four-try, 100% shut-off, Prepurge, Post-Purge, Auto Reset, Tri-color LED Status/Fault Indicator.

14.3 Suspension Specifications

Hang heater with materials with a minimum working load of 75 lbs (33 kg). *See Page 13, Figure 11*.

14.4 Controls Specifications

Time switches, sensors, etc. can be wired into the electrical supply. External controls supplied as an optional extra.

General Specifications for the heaters are as follows:

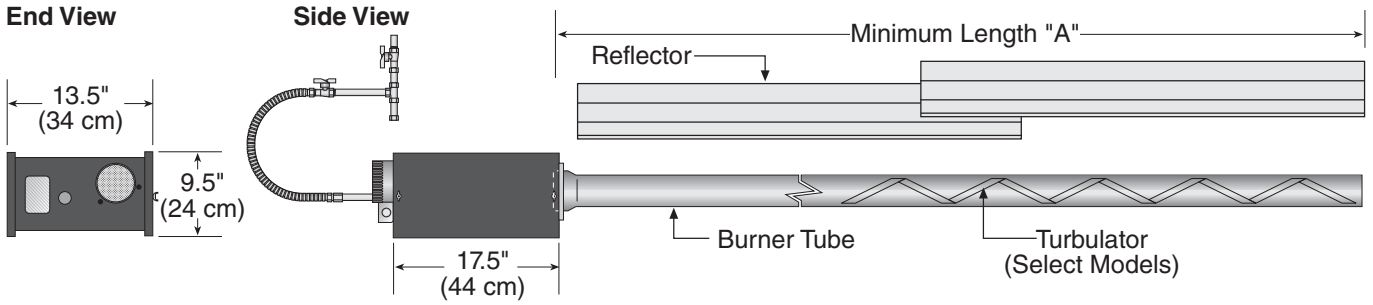

Model	Heat Input Rate (NG) (Btu/h) X (1000) Min. to Max.	Heat Input Rate (LP) (Btu/h) X (1000) Min. to Max.	Length "A" Minimum	Recommended Minimum Mounting Height* Space	Spot
VM-80	52 to 80	55 to 80	20' (6m)	12'-15' (3.6 - 4.5 m)	11' (3.3 m)
VM-115	75 to 115	78 to 115	30' (9m)	15'-20' (4.5 - 6 m)	15' (4.6 m)
VM-150	100 to 150	105 to 150	40' (12m)	20'-25' (6 - 7.6 m)	20' (6.1 m)
VM-200	130 to 200	135 to 190	50' (15m)	25' (7.6 m)	23' (7 m)

**See Page 6, Section 3* for clearances to combustibles.

GAS PRESSURE AT MANIFOLD:

Natural Gas: 4.5" wc
LP Gas: 11.0" wc

PIPE CONNECTION:

1/2" NPT (for 80 & 115 models)
3/4" NPT (for 150 & 200 models)

DIMENSIONS:

Vent Connection Size: 4" (10 cm)
Outside Air Connection Size:
5" (13 cm) for 150 & 200 models
4" (10 cm) for 80 & 115 models
Refer to figure above for dimensional information.

GAS INLET PRESSURE:

Natural Gas:

for 80, 115 & 150 models 5.5" wc Minimum
14.0" wc Maximum
for 200 6.0" wc Minimum
14.0" wc Maximum

LP Gas: 12.0" wc Minimum
14.0" wc Maximum

ELECTRICAL RATING (ALL MODELS):

120V - 60 Hz., 4.8 A (start), 1.3 A (run)

Attach this information to a wall near the VAL-CO heater.

People. Products. Solutions.

Read the Installation, Operation, and Service Manual thoroughly before installation, operation, or service.
Know your model number and installed configuration.
Model number and installed configuration are found on the burner and in the Installation, Operation and Service Manual.
Write the largest clearance dimensions with permanent ink according to your model number and configuration in the open spaces below.

OPERATING INSTRUCTIONS

1. STOP! Read all safety instructions on this information sheet.
2. Open the manual gas valve in the heater supply line.
3. Turn on electric power to the heater.
4. Set the thermostat to desired setting.

TO TURN OFF THE HEATER

1. Set the thermostat to off or the lowest setting.

IF THE HEATER WILL NOT OPERATE, TO ENSURE YOUR SAFETY, FOLLOW THESE INSTRUCTIONS TO SHUT DOWN YOUR HEATER

1. Set the thermostat to off or the lowest setting.
2. Turn off electric power to the heater.
3. Turn off the manual gas valve in the heater supply line.
4. Call your registered installer/contractor qualified in the installation and service of gas-fired heating equipment.

⚠WARNING

Fire Hazard

Keep all flammable objects, liquids and vapors the minimum required clearances to combustibles away from heater.

Some objects will catch fire or explode when placed close to heater.

Failure to follow these instructions can result in death, injury or property damage.

Maintain _____ clearance to the side and _____ clearance below the heater from vehicles and combustible materials.

VAL-CO.
210 East Main Street
P.O. Box 117
Coldwater, OH 45828-2526
Telephone: 800-998-2526
Fax: 419-678-2200

Installation Code and Annual Inspections:
All installation and service of VAL-CO® equipment must be performed by a contractor qualified in the installation and service of equipment sold and supplied by Val-Co and conform to all requirements set forth in the VAL-CO® manuals and all applicable governmental authorities pertaining to the installation, service, operation and labeling of the equipment. To help facilitate optimum performance and safety, Val-Co recommends that a qualified contractor conduct, at a minimum, annual inspections of your VAL-CO® equipment and perform service where necessary, using only replacement parts sold and supplied by Val-Co.
Further Information: Applications, engineering and detailed guidance on systems design, installation and equipment performance is available through VAL-CO® representatives.
Please contact us for any further information you may require, including the Installation, Operation and Service Manual.
This product is not for residential use.

© 2012 Roberts-Gordon LLC All rights reserved. No part of this work covered by the copyrights herein may be reproduced or copied in any form or by any means – graphic, electronic, or mechanical, including photocopying, recording, taping, or information storage and retrieval systems – without written permission of Roberts-Gordon LLC.

www.valcompanies.com Printed in the U.S.A. P/N 91037917 Rev F